HITACHI

HHAW | NO. 0093E

RAK-18PEC/RAC-18WEC
RAK-25PEC/RAC-25WEC
RAK-35PEC/RAC-35WEC
RAK-50PEC/RAC-50WEC
RAK-25PECC/RAC-25WEC
RAK-35PECC/RAC-35WEC
RAK-50PECC/RAC-50WEC
RAK-10PECI/RAC-10WECI
RAK-14PECI/RAC-14WECI
RAK-20PECI/RAC-20WECI

SERVICE MANUAL

TECHNICAL INFORMATION

FOR SERVICE PERSONNEL ONLY

OUTDOOR UNIT

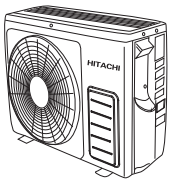

RAC-18WEC
RAC-25WEC
RAC-35WEC
RAC-10WECI
RAC-14WECI

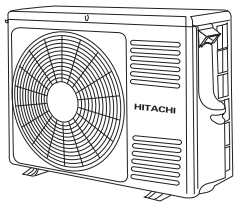

RAC-50WEC
RAC-20WECI

INDOOR UNIT

RAK-18PEC
RAK-25PEC
RAK-35PEC
RAK-50PEC
RAK-25PECC
RAK-35PECC
RAK-50PECC
RAK-10PECI
RAK-14PECI
RAK-20PECI

REFER TO THE FOUNDATION MANUAL

CONTENTS

SPECIFICATIONS

TYPE			DC INVERTER							
			INDOOR UNIT	OUTDOOR UNIT	INDOOR UNIT	OUTDOOR UNIT	INDOOR UNIT	OUTDOOR UNIT	INDOOR UNIT	OUTDOOR UNIT
MODEL			RAK-18PEC	RAC-18WEC	RAK-25PEC RAK-25PECC RAK-10PECI	RAC-25WEC RAC-10WECI	RAK-35PEC RAK-35PECC RAK-14PECI	RAC-35WEC RAC-14WECI	RAK-50PEC RAK-50PECC RAK-20PECI	RAC-50WEC RAC-20WECI
POWER SOURCE			1 PHASE,50Hz,220-230V		1 PHASE,50Hz,220-230V		1 PHASE,50Hz,220-230V		1 PHASE,50Hz, 220-230V	
COOLING	TOTAL INPUT (W)		580 (250～1,010)		700 (250～1,290)		1,090 (250～1,460)		1,560 (500～2,100)	
	TOTAL AMPERES (A)		3.19-3.05		3.84-3.67		5.41-5.18		7.29-6.85	
	CAPACITY	(KW)	2.00 (0.90～2.50)		2.50 (0.90～3.10)		3.50 (0.90～4.00)		5.00 (1.90～5.20)	
		(B.T.U./h)	6,820 (3,070～8,530)		8,530 (3,070～10,580)		11,940 (3,070～13,650)		17,060 (6,480～17,740)	
HEATING	TOTAL INPUT (W)		620 (250～970)		880 (250～1,250)		1,100 (250～1,700)		1,660 (500～2,750)	
	TOTAL AMPERES (A)		3.62-3.46		4.56-4.36		5.36-5.13		7.56-7.23	
	CAPACITY	(KW)	2.50 (0.90～3.20)		3.40 (0.90～4.40)		4.20 (0.90～5.00)		6.00 (2.20～7.30)	
		(B.T.U./h)	8,530 (3,070～10,920)		11,600 (3,070～15,010)		14,330 (3,070～17,060)		20,470 (7,510～24,910)	
DIMENSIONS (mm)		W	780	660(+60)※	780	660(+60)※	780	660(+60)※	780	792(+91)※
		H	280	530	280	530	280	530	280	600
		D	218	278(+55)※	218	278(+55)※	218	278(+55)※	218	299(+47)※
NET WEIGHT		(Kg)	7.5	24.5	7.5	24.5	7.5	27.5	8	40

※ After installation

SPECIFICATIONS AND PARTS ARE SUBJECT TO CHANGE FOR IMPROVEMENT

ROOM AIR CONDITIONER

INDOOR UNIT + OUTDOOR UNIT

Hitachi Household Appliances(Wuhu) Co., Ltd.

SAFETY DURING REPAIR WORK

1. In order to disassemble and repair the unit in question, be sure to disconnect the power cord plug from the power outlet before starting the work.

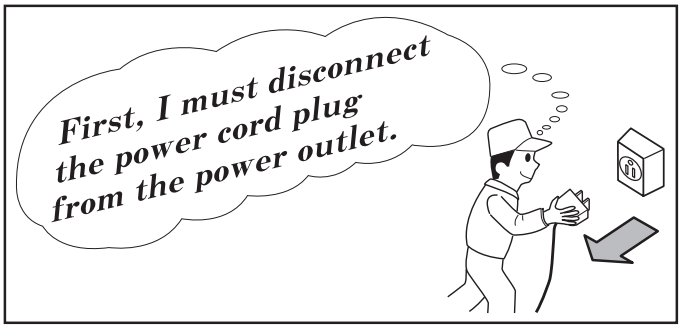

2. If it is necessary to replace any parts, they should be replaced with respective genuine parts for the unit, and the replacement must be effected in correct manner according to the instructions in the Service Manual of the unit.

> If the contacts of electrical parts are defective, replace the electrical parts without trying to repair them

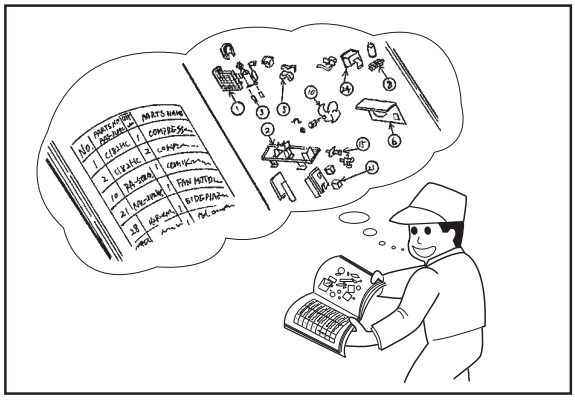

3. After completion of repairs, the initial state should be restored.

4. Lead wires should be connected and laid as in the initial state.

5. Modification of the unit by the user himself should absolutely be prohibited.

6. Tools and measuring instruments for use in repairs or inspection should be accurately calibrated in advance.

7. In installing the unit having been repaired, be careful to prevent the occurrence of any accident such as electrical shock, leak of current, or bodily injury due to the drop of any part.

8. To check the insulation of the unit, measure the insulation resistance between the power cord plug and grounding terminal of the unit.
   The insulation resistance should be 1MΩ or more as measured by a 500V DC megger.

9. The initial location of installation such as window, floor or the other should be checked for being safe enough to support the repaired unit again.
   If it is found not so strong and safe, the unit should be installed at the initial location after reinforced or at a new location.

10. Any inflammable object must not be placed about the location of installation.

11. Check the grounding to see whether it is proper or not, and if it is found improper, connect the grounding terminal to the earth.

WORKING STANDARDS FOR PREVENTING BREAKAGE OF SEMICONDUCTORS

1. Scope

The standards provide for items to be generally observed in carrying and handling semiconductors in relative manufactures during maintenance and handling thereof. (They apply the same to handling of abnormal goods such as rejected goods being returned.)

2. Object parts

(1) Microcomputer

(2) Integrated circuits (I.C.)

(3) Field effective transistor (F.E.T.)

(4) P.C. boards or the like to which the parts mentioned in (1) and (2) of this paragraph are equipped.

3. Items to be observed in handling

(1) Use a conductive container for carrying and storing of parts. (Even rejected goods should be handled in the same way.)

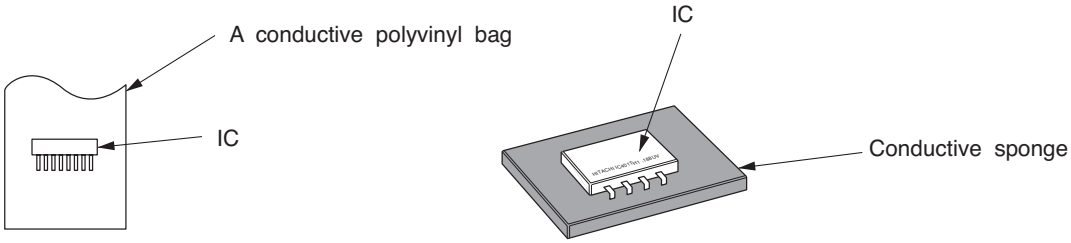

Fig. 1 Conductive container

(2) When any part is handled uncovered (in counting, packing and the like), the handling person must always use himself as a body earth. (Make yourself a body earth by passing one M ohm earth resistance through a ring or bracelet.)

(3) Be careful not to touch the parts with your clothing when you hold a part even if a body earth is being taken.

(4) Be sure to place a part on a metal plate with grounding.

(5) Be careful not to fail to turn off power when you repair the printed circuit board. At the same time, try to repair the printed circuit board on a grounded metal plate.

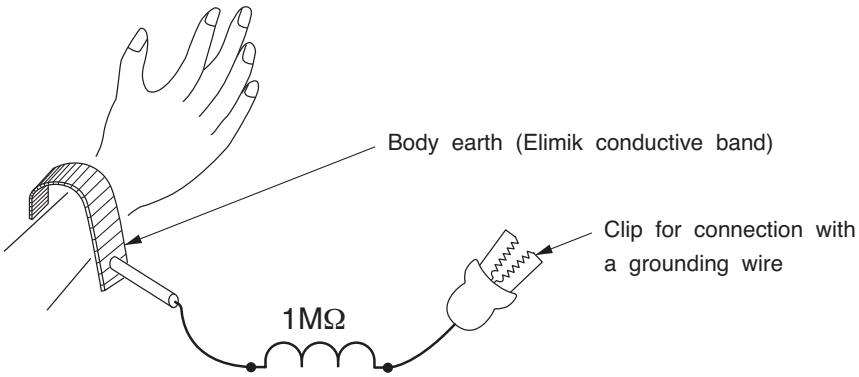

Fig. 2 Body earth

(6) Use a three wire type soldering iron including a grounding wire.

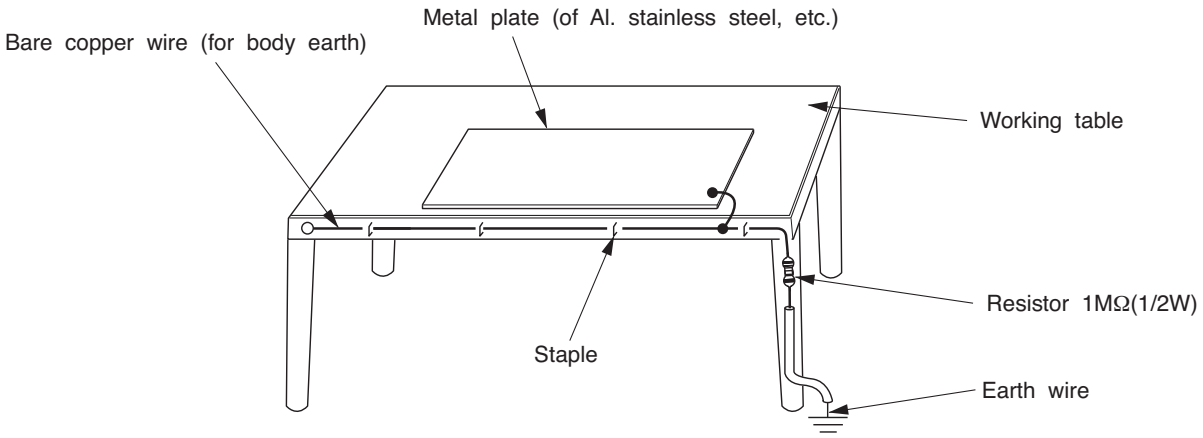

Fig.3 Grounding of the working table

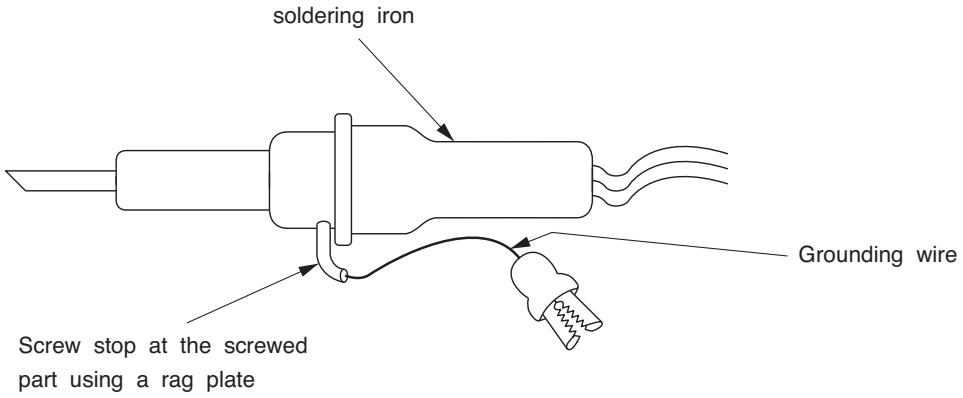

Fig.4 Grounding a solder iron

Use a high insulation mode (100V, 10MΩ or higher) when ordinary iron is to be used.

(7) In checking circuits for maintenance, inspection, or some others, be careful not to have the test probes of the measuring instrument short circuit a load circuit or the like.

⚠ CAUTION

1. In quiet or stop operation, slight flowing noise of refrigerant in the refrigerating cycle is heard occasionally, but this noise is not abnormal for the operation.

2. When it thunders near by, it is recommend to stop the operation and turn off the circuit breaker for safety.

3. In the event of power failure,the room air conditioner will restare automatically in the previously selected mode once the power is restored. In the event of power failure during TIMER operation, the room air comditioner will not start automatically. Re-press ON/OFF button after 3 minutes from when the unit off or power recovery.

4. If the room air conditioner is stopped by adjusting thermostat, or missoperation, and re-start in a moment, there is occasion that the cooling and heating operation does not start for 3 minutes, it is not abnormal and this is the result of the operation of IC delay circuit. This IC delay circuit ensures that there is no danger of blowing fuse or damaging parts even if operation is restarted accidentally.

5. This room air conditioner should not be used at the cooling operation when the outside temperature is below -10°C (14°F).

6. This room air conditioner (the reverse cycle) should not be used when the outside temperature is below –15°C (5°F).
   If the reverse cycle is used under this condition, the outside heat exchanger is frosted and efficiency falls.

7. When the outside heat exchanger is frosted, the frost is melted by operating the hot gas system, it is not trouble that at this time fan stops and the vapour may rise from the outside heat exchanger.

SPECIFICATIONS

MODEL		RAK-18PEC RAK-25PEC RAK-35PEC RAK-50PEC RAK-25PECC RAK-35PECC RAK-50PECC RAK-10PECI RAK-14PECI RAK-20PECI	RAC-18WEC RAC-25WEC RAC-10WECI	RAC-35WEC RAC-14WECI	RAC-50WEC RAC-20WECI
FAN MOTOR		30W (DC325V)	45W (DC120~380V)		
FAN MOTOR CAPACITOR		NO	NO		
FAN MOTOR PROTECTOR		NO	NO		
COMPRESSOR		–	ASD084SFNA7JK1		ASG133CDNB7AT
COMPRESSOR MOTOR CAPACITOR		NO	NO		
OVERLOAD PROTECTOR		NO	YES(INTERNAL)		
OVERHEAT PROTECTOR		NO	YES		
FUSE (for MICROPROCESSOR)		3.15A	15A, 2A, 3A, 3.15A		25A, 2A, 3A, 3.15A
POWER RELAY		NO	G4A-1A		
POWER SWITCH		NO	NO		
TEMPORARY SWITCH		YES	NO		
SERVICE SWITCH		NO	YES		
TRANSFORMER		YES	YES		
VARISTOR		450NR	450NR, ERZVA431		
NOISE SUPPRESSOR		NO	YES		
THERMOSTAT		YES(IC)	YES(IC)		
REMOTE CONTROL SWITCH (LIQUID CRYSTAL)		YES	NO		
REFRIGERANT CHARGING VOLUME (Refrigerant R410A)	UNIT	----------	720g	950g	1250g
	PIPES (MAX. 20m) (MIN. 3m)	WITHOUT REFRIGERANT BECAUSE COUPLING IS FLARE TYPE.			

Figure showing the installation of Indoor and Outdoor unit

MODEL RAK-18PEC/RAC-18WEC
RAK-25PEC/RAC-25WEC
RAK-35PEC/RAC-35WEC
RAK-25PECC/RAC-25WEC
RAK-35PECC/RAC-35WEC
RAK-10PECI/RAC-10WECI
RAK-14PECI/RAC-14WECI

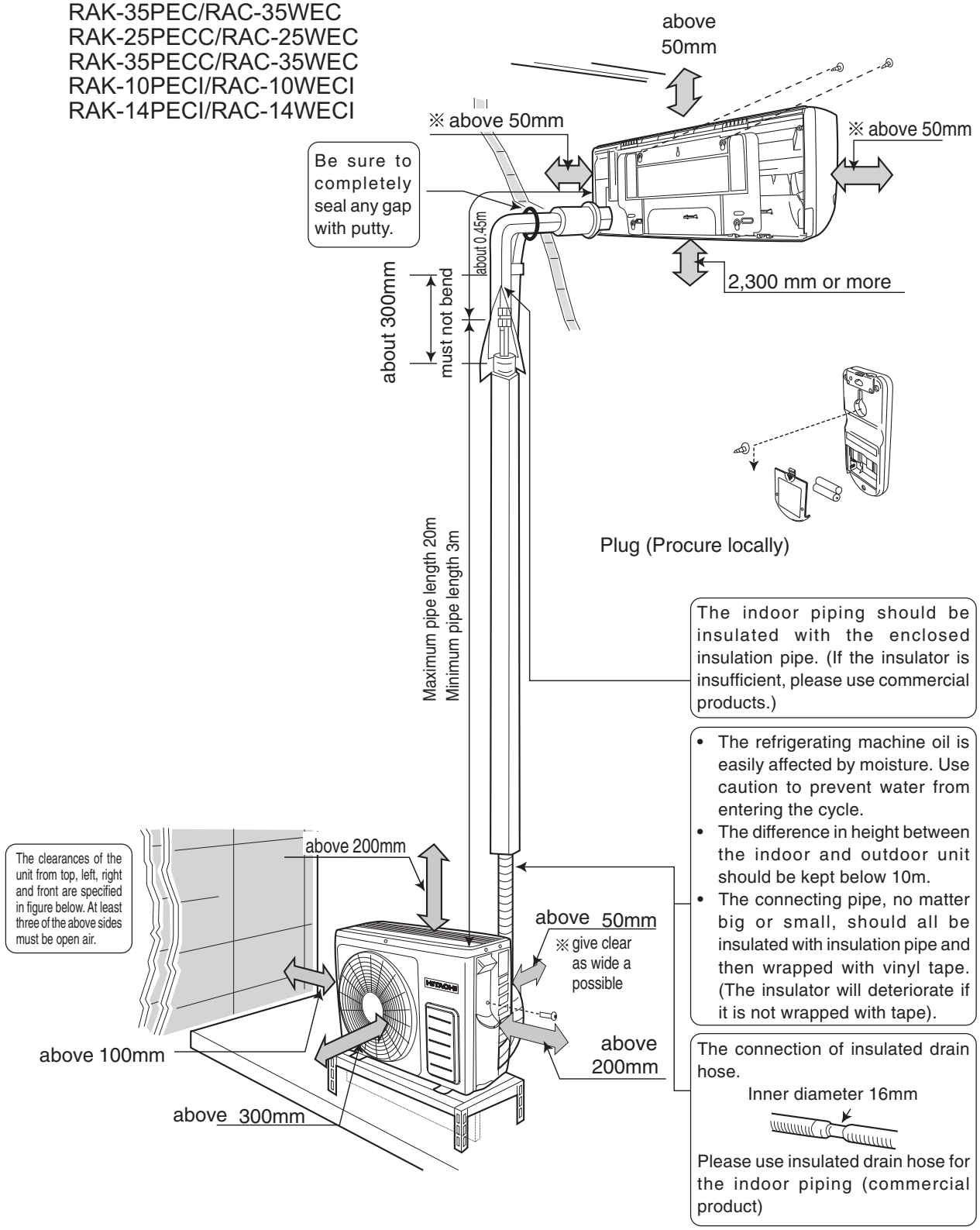

Figure showing the installation of Indoor and Outdoor unit

MODEL RAK-50PEC/RAC-50WEC
RAK-20PECI/RAC-20WECI

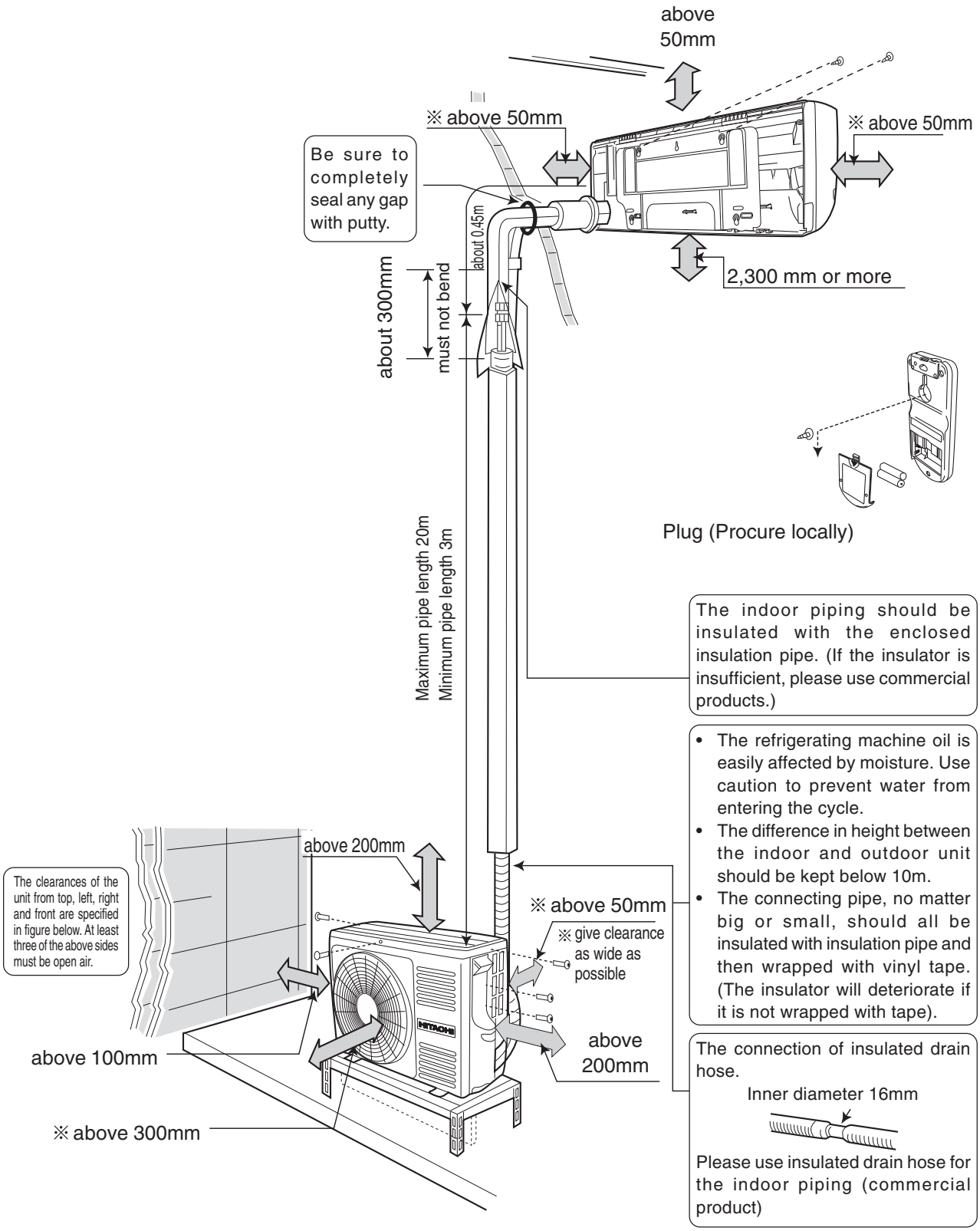

ENGLISH

MANUAL OPERATION [Heating • Dehumidify • Cooling]

■ Please use under below condition when you want to set the function mode, room temperature and fan speed manually.

HEATING	DEHUMIDIFYING	COOLING
Outdoor Temperature 24˚C below	Room Temperature 16˚C above	Outdoor Temperature 21˚C above

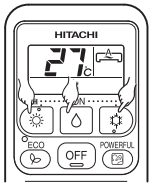

1 OPERATION MODE SELECTION

- Every time you press the button, the mode will change as the below.

: HEATING

: DEHUMIDIFYING

: COOLING

2 ROOM TEMPERATURE SETTING

◄ Up

◄ Down

■ Recommend Temperature

Heating	20~24˚C
Dehumidify	20~26˚C
Cooling	25~28˚C

- The cooling operation does not start if the temperature setting is higher than the current room temperature.

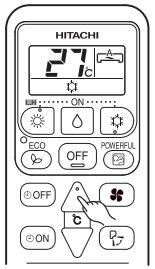

3 FAN SPEED SETTING

- Every time you press the button, fan speed will change as below sequence.

- **HEATING / COOLING** : AUTO → HIGH → MED → LOW → SILENT
- **DEHUMIDIFYING** : LOW → SILENT

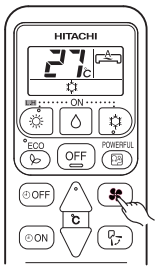

4 Press the (OFF) (STOP) button

- Operation stops with a beep.

NAMES AND FUNCTIONS OF REMOTE CONTROLLER

■ This controls the operation function and timer setting of the room air conditioner. The range of control is about 7 meters. If indoor lighting is controlled electronically, the range of control may be shorter.

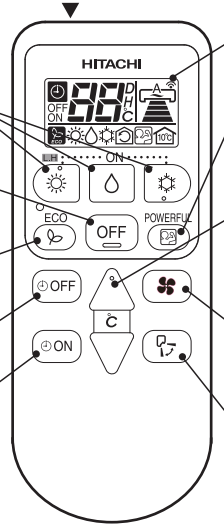

Transmission Sign
The transmission sign blinks when a signal has been send.

MODE Button
Select the operation mode.
(☞ Page 3)

POWERFUL Button
Press this button to start powerful operation. (☞ Page 4)

STOP Button
Press this button to stop operation.

TEMPERATURE Button
Room temperature setting.
Value will change quicker when keep pressing.
(☞ Page 3)

ECO Button
Use this button to set the ECO mode.
(☞ Page 6)

FAN SPEED Button
Select the fan speed for cooling and heating mode.
(☞ Page 3)

OFF TIMER Button
Select the turn OFF time.
(☞ Page 4)

ON TIMER Button
Select the turn ON time.
(☞ Page 4)

AUTO SWING Button
Control the angle of the horizontal air deflector.
(☞ Page 7)

Precautions for Use

- Do not put the remote controller under direct sunlight and high temperature.
- Do not drop it on the floor, and protect it from water.
- If you press the FUNCTION button during operation, the air conditioner may stop for about 3 minutes for protection before you can start it again.

ENGLISH

LEAVE HOME(LH) OPERATION

■ Prevent the room temperature from falling too much by setting temperature at 10 deg automatically when no one is at home.

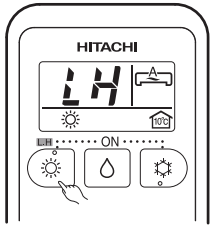

START — Hold down the HEATING Button for 3-5 seconds to start Leave Home operation.
- Room temperature is automatically set at 10 deg.
- " ", " LH ", " ", " ", is displayed on the LCD.

CANCEL — Press the (OFF) (STOP) button.
Change to other Operation Mode.

NOTE

- During Leave Home operation, fan speed and horizontal air deflector position cannot be changed.

TIMER RESERVATION

■ ON Timer and OFF Timer are available.

Timer Reservation

■ Operation stop at setting time

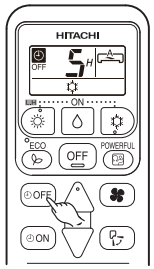

1 (OFF) OFF TIME setting

- Select the OFF TIME by pressing the (OFF) (OFF) Button.
- Setting time will change according to the below sequence when you press the button.

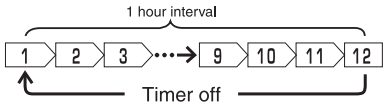

2 (ON) ON TIME setting

- Select the ON TIME by pressing the (ON) (ON) Button.
- Setting time will change according to the below sequence when you press the button.

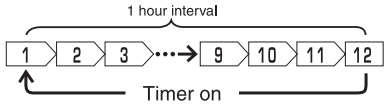

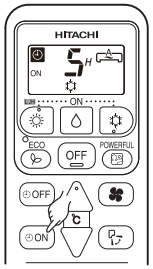

POWERFUL OPERATION

- By pressing (POWERFUL) button during HEATING, DEHUMIDIFYING, COOLING operation, the air conditioner performs at maximum power.
- During POWERFUL operation, cooler or warmer air will be blown out from indoor unit for COOLING or HEATING operation respectively.

START — Press the (POWERFUL) button during operation.
- " " is displayed on the LCD.
POWERFUL operation ends in 20 minutes. Then the system automatically operates with the previous settings used before POWERFUL operation.

CANCEL — Press the (POWERFUL) button again.
- " " disappears from the LCD.

NOTE

- When ECO mode, or LEAVE HOME mode is selected, POWERFUL operation is cancelled.
- During POWERFUL operation, capacity of the air conditioner will not increase
  - if the air conditioner is already running at maximum capacity.
  - just before defrost operation (when the air conditioner is running in HEATING operation).
- After auto restart, POWERFUL operation is cancelled and previous operation shall start.

ENGLISH

ADJUSTING THE AIRFLOW DIRECTION

1 Adjust the airflow upward and downward.
According to operation, the horizontal air deflector is automatically set to the proper angle suitable for each operation.The deflector can be swings up and down and also set to the desired angle using the " (AUTO SWING)" button.

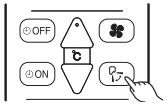

- If the " (AUTO SWING) " button is pressed once, the horizontal air deflector swings up and down.If the button is pressed again, the deflector stops in its current position. Several seconde (about 6 seconds) may be required before the deflector starts to move.
- When the operation is stopped, the horizontal air deflector moves and stops at the position where the air outlet closes.

CAUTION

- In "Cooling" operation, do not keep the horizontal air deflector swinging for a long time. Some dew may form on the horizontal air deflector and some dew may drop from it.

2 Adjust the airflow to left and right.
Hold the vertical air deflector as shown on the right and adjust the airflow to left and right.

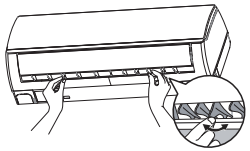

HOW TO EXCHANGE THE BATTERIES IN THE REMOTE CONTROLLER

1 Remove the cover as shown in the figure and take out the old batteries.

2 Install the new batteries.
The direction of the batteries should match the marks in the case.

CAUTION

1. Do not use new and old batteries, or different kinds of batteries together.
2. Take out the batteries when you do not use the remote controller for 2 or 3 months.

Push and pull to the dirction of arrow

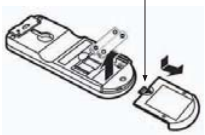

ECO OPERATION

■ Energy saving operation by changing set temperature and by limiting the maximum power consumption value.

By pressing the (ECO) button during Heating, Dehumidifying or Cooling operation, the air conditioner performs the "ECO" operation.

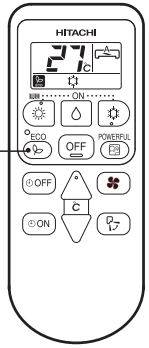

START

Press (ECO) button during operation.
- " " is displayed on the LCD.
- Energy saving operation will start by changing the set temperature higher or lower and saving operation power consumption.

CANCEL

Press (OFF) (START/STOP) button.
- Press (ECO) button again.
- " " disappears from the LCD.

NOTE

- In case the power consumption is already low,ECO operation will not reduce the power consumption.
- By pressing (POWERFUL) button, ECO operation is cancelled.
- After auto restart, ECO operation is cancelled and previous operation mode shall start.

ADJUSTING THE AIRFLOW DIRECTION

1 Adjust the airflow upward and downward.
According to operation, the horizontal air deflector is automatically set to the proper angle suitable for each operation.The deflector can be swings up and down and also set to the desired angle using the " (AUTO SWING)" button.

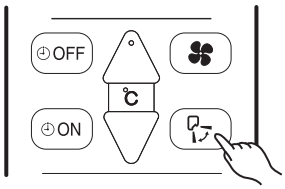

- If the " (AUTO SWING) " button is pressed once, the horizontal air deflector swings up and down.If the button is pressed again, the deflector stops in its current position. Several seconde (about 6 seconds) may be required before the deflector starts to move.
- The adjusting range of the horizontal air deflector is shown on the right.
- When the operation is stopped, the horizontal air deflector moves and stops at the position where the air outlet closes.

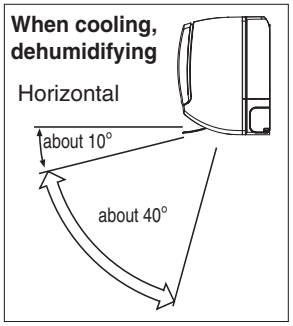

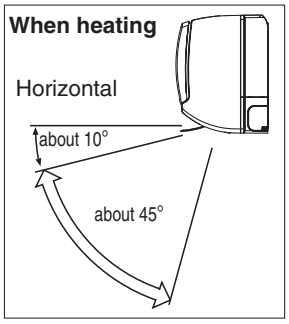

⚠ CAUTION

- In "Cooling" operation, do not keep the horizontal air deflector swinging for a long time. Some dew may form on the horizontal air deflector and some dew may drop from it.

2 Adjust the airflow to left and right.
Hold the vertical air deflector as shown on the right and adjust the airflow to left and right.

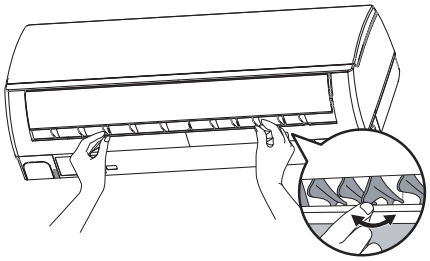

ENGLISH

PRECAUTIONS DURING OPERATION

CAUTION

- The product shall be operated under the manufacturer specification and not for any other intended use. (PROHIBITION)
- (DON'T WET) Do not attempt to operate the unit with wet hands, this could cause fatal accident.
- When operating the unit with burning equipments, regularly ventilate the room to avoid oxygen insufficiency. (STRICTLY OBSERVE PRECAUTIONS)
- (PROHIBITION) Do not direct the cool air coming out from the air-conditioner panel to face household heating apparatus as this may affect the working of apparatus such as the electric kettle, oven etc.
- Please ensure that outdoor mounting frame is always stable, firm and without defect. If not, the outdoor unit may collapse and cause danger. (PROHIBITION)
- (PROHIBITION) Do not wash the unit with water or place a water container such as a vase on the indoor unit. Electrical leakage could be present and cause electric shock.
- Do not place plants directly under the airflow as it is bad for the plants. (PROHIBITION)
- ("OFF") Be sure to stop the operation by using the remote controller and turn off the circuit breaker during cleaning, the high-speed fan inside the unit may cause danger.
- Turn off the circuit breaker if the unit is not be operated for a long period. ("OFF")
- (PROHIBITION) Do not climb on the outdoor unit or put objects on it.
- When operating the unit with the door and windows opened, (the room humidity is always above 80%) and with the air deflector facing down or moving automatically for a long period of time, water will condense on the air deflector and drips down occasionally. This will wet your furniture. Therefore, do not operate under such condition for a long time. (PROHIBITION)
- (PROHIBITION) If the amount of heat in the room is above the cooling or heating capability of the unit (for example: more people entering the room, using heating equipments and etc.), the preset room temperature cannot be achieved.
- Indoor unit cleaning must be performed by authorized personnel only. Consult your sales agent. Using a commercially available detergent or similar can damage the plastic parts or clog the drain pipe, causing water to drip with potential electric shock hazard. (PROHIBITION)
- (DON'T TOUCH) Do not touch the air outlet, bottom surface and aluminium fin of the outdoor unit. You may get hurt.
- Do not touch the refrigerant pipe and connecting valve. Burns may result. (DON'T TOUCH)
- This appliance is not to be used by children or persons with reduced physical, sensory or mental capabilities, or lack of experience and knowledge, unless they have been given supervision or instruction. Children must be supervised not to play with the appliance.

SAFETY PRECAUTION

- Please read the "Safety Precaution" carefully before operating the unit to ensure correct usage of the unit.
- Pay special attention to signs of "⚠ **Warning**" and "⚠ **Caution**". The "Warning" section contains matters which, if not observed strictly, may cause death or serious injury. The "Caution" section contains matters which may result in serious consequences if not observed properly. Please observe all instructions strictly to ensure safety.
- The signs indicate the following meanings. (The following are examples of signs.)

Make sure to connect earth line.	This sign in the figure indicates prohibition.
Indicates the instructions that must be followed.	

- Please keep this manual after reading.

PRECAUTIONS DURING INSTALLATION

WARNING

- Do not reconstruct the unit. Water leakage, fault, short circuit or fire may occur if you reconstruct the unit by yourself. (PROHIBITION)
- Please ask your sales agent or qualified technician for the installation of your unit. Water leakage, short circuit or fire may occur if you install the unit by yourself.
- Please use earth line. Do not place the earth line near water or gas pipes, lightning-conductor, or the earth line of telephone. Improper installation of earth line may cause electric shock or fire. (CONNECT EARTH LINE)
- Be sure to use the specified piping set for R410A. Otherwise, this may result in broken copper pipes or faults.

CAUTION

- A circuit breaker should be installed depending on the mounting site of the unit. Without a circuit breaker, the danger of electric shock exists. (PROHIBITION)
- Do not install the unit near a location where there is flammable gas. The outdoor unit may catch fire if flammable gas leaks around it.
- Please ensure smooth flow of water when installing the drain hose.
- Make sure that a single phase 220V-230V power source is used. The use of other power sources may cause electrical components to overheat and lead to fire. (PROHIBITION)

PRECAUTIONS DURING SHIFTING OR MAINTENANCE

WARNING

- Should abnormal situation arise (like burning smell), please stop operating the unit and turn off the circuit breaker. Contact your agent. Fault, short circuit or fire may occur if you continue to operate the unit under abnormal situation. ("OFF")
- Please contact your agent for maintenance. Improper self maintenance may cause electric shock and fire.
- Please contact your agent if you need to remove and reinstall the unit. Electric shock or fire may occur if you remove and reinstall the unit yourself improperly.

PRECAUTIONS DURING OPERATION

WARNING

- Avoid an extended period of direct airflow for your health. (PROHIBITION)
- (PROHIBITION) Do not put objects like thin rods into the panel of blower and suction side because the high-speed fan inside may cause danger.
- Do not use any conductor as fuse wire, this could cause fatal accident. (PROHIBITION)
- ("OFF") During thunder storm, disconnect the plug top and turn off the circuit breaker.
- Spray cans and other combustibles should not be located within a meter of the air outlets of both indoor and outdoor units. As a spray can's internal pressure can be increased by hot air, a rupture may result. (PROHIBITION)

NAMES AND FUNCTIONS OF EACH PART

INDOOR UNIT INDICATIONS

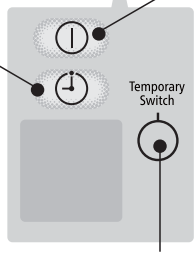

OPERATION LAMP (Yellow)
This lamp lights during operation. The OPERATION LAMP flashes in the following cases during heating.

(1) **During preheating**
For about 2-3 minutes after starting up.

(2) **During defrosting**
Defrosting will be performed about once an hour when frost forms on the heat exchanger of the outdoor unit, for 5-10 minutes each time.

TIMER LAMP (Orange)
This lamp lights when the timer is working.

TEMPORARY SWITCH
Use this switch to start and stop when the remote controller does not work.

- By pressing the temporary switch, the operation is done in automatic mode.
- When the operation is done using the temporary switch after the power source is turned off and turn on again, the operation is done in automatic mode.

⚠ CAUTION
Turn off the circuit breaker if the unit is not be operated for a long period.

☆ If the power stays on and the unit is not operated, power is slightly consumed in the control circuit. The power is saved by turning off the power switch (or the circuit breaker when the power is supplied from the outdoor unit).

ENGLISH

OPERATING RANGE

Operation mode	Cooling / Dehumidifying	Heating
Outdoor temperature	-10 to 43°C	-15 to 21°C

NAMES AND FUNCTIONS OF EACH PART

INDOOR UNIT

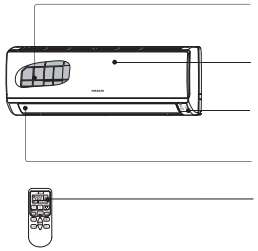

Air filter
To prevent dust from coming into the indoor unit.
(Refer page 6)

Front panel
(Refer page 7)

Indoor unit indicators
Light indicator showing the operating condition.
(Refer page 5)

Horizontal deflector Vertical deflector (Air Outlet)

Remote controller
Send out operation signal to the indoor unit. So as to operate the whole unit.

OUTDOOR UNIT

RAC-18WEC
RAC-25WEC
RAC-35WEC
RAC-10WECI
RAC-14WECI

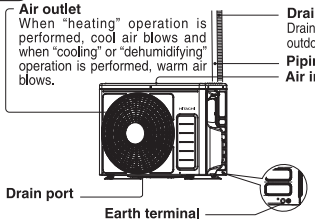

Air outlet
When "heating" operation is performed, cool air blows and when "cooling" or "dehumidifying" operation is performed, warm air blows.

Drain hose
Drains the dehumidified water from the indoor unit to the outdoor during "cooling" or "dehumidifying" operation.

Piping and Wiring

Air inlets (Rear and left sides)

Drain port

Earth terminal

RAC-50WEC
RAC-20WECI

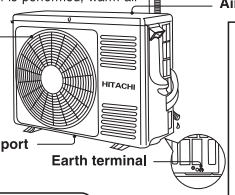

Air outlet
When "heating" operation is performed, cool air blows and when "cooling" or "dehumidifying" operation is performed, warm air blows.

Drain hose
Drains the dehumidified water from the indoor unit to the outdoor during "cooling" or "dehumidifying" operation.

Piping and Wiring

Air inlets (Rear and left sides)

Drain port

Earth terminal

About the outdoor unit:
- When "Stop" is selected during operation of the indoor unit, the fan of the outdoor unit continues turning for 10 to 60 seconds to cool the electric parts down.
- In heating operation, condensate or water due to defrosting will flow. Do not cover the drain port of the outdoor unit because such water may freeze in the chilly area.
- When the outdoor unit is hung on the ceiling, install the bush and drain pipe on the drain port and drain water.

MODEL NAME AND DIMENSIONS

MODEL	WIDTH (mm)	HEIGHT (mm)	DEPTH (mm)
RAK-18/25/35/50PEC,RAK-25/35/50PECC,RAK-10/14/20PECI	780	280	218
RAC-18/25/35WEC,RAC-10/14WECI	660	530	278
RAC-50WEC,RAC-20WECI	792	600	299

ENGLISH

2. CLEANING OF FRONT PANEL

- Remove the front panel and wash with clean water. Wash it with a soft sponge. After using neutral detergent, wash thoroughly with clean water.
- When front panel is not removed, wipe it with a soft dry cloth. Wipe the remote controller thoroughly with a soft dry cloth.
- Wipe the water thoroughly. If water remains at indicators or signal receiver of indoor unit, it causes trouble.

Method of removing the front panel.
Be sure to hold the front panel with both hands to detach and attach it.

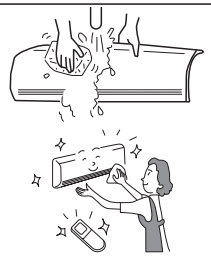

Removing the Front Panel

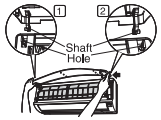

- When the front panel is fully opened with both hands, push the right arm to the inside to release it, and while closing the front panel slightly, put it out forward.

Attaching the Front Panel

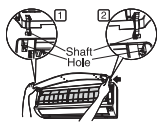

- Move the shafts of the left and right arms into the steps in the unit and securely insert them into the holes.

⚠ CAUTION

- Do not splash or direct water to the body of the unit when cleaning it as this may cause short circuit.
- Never use hot water (above 40°C), benzine, gasoline, acid, thinner or a brush, because they will damage the plastic surface and the coating.

MAINTENANCE

⚠ CAUTION

Cleaning and maintenance must be carried out only by qualified service personal. Before cleaning, stop operation and switch off the power supply.

1. AIR FILTER

Please clean the filter once about every two weeks. By doing so, the power rates are saved. In case the air filter is full of dust, the air flow will decrease and the cooling capacity will be reduced. Further, noise may occur. Be sure to clean the filter following the procedure below.

PROCEDURE

1. Open the front panel carefully and remove the filter.

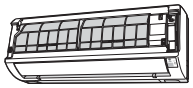

2. Vacuum dust from the air filter using vacuum cleaner. If there is too much dust, wash the filter with a detergent and rinse it thoroughly. After that, dry it in the shade.

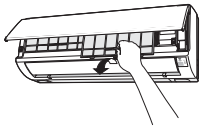

3. • Set the filter with “FRONT” mark facing front, and slot them into the original state.
   • After attaching the filters, push the front panel at three arrow portions as shown in figure and close it.

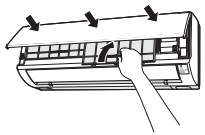

⚠ CAUTION

- Do not wash with hot water at more than 40°C. The filter may shrink.
- When washing it, shake off moisture completely and dry it in the shade; do not expose it directly to the sun. The filter may shrink.
- Don't operate the unit without filter. Fault may occur if you continue.

REGULAR INSPECTION

PLEASE CHECK THE FOLLOWING POINTS EVERY EITHER HALF YEARLY OR YEARLY. CONTACT YOUR SALES AGENT SHOULD YOU NEED ANY HELP.

1		WARNING	Check to see if the unit's earth line has been connected correctly. If the earth line is disconnected or faulty, unit failure or electric shock hazard may result.
2		WARNING	Check to see if the mounting frame has rusted excessively or if the outdoor unit has tilted or become unstable. It could collapse or fall, causing injury.

AFTER SALES SERVICE AND WARRANTY

WHEN ASKING FOR SERVICE, CHECK THE FOLLOWING POINTS.

CONDITION	CHECK THE FOLLOWING POINTS
If the remote controller is not transmitting a signal. (Remote controller display is dim or blank.)	• Do the batteries need replacement? • Is the polarity of the inserted batteries correct?
When it does not operate.	• Is the fuse all right? • Is the voltage extremely high or low? • Is the circuit breaker "ON"? • Is the power plug inserted? • Do you have any power cut?
When it does not cool well. When it does not heat well.	• Is the air filter blocked with dust? • Is the set temperature suitable? • Have horizontal air deflectors been adjusted to their correct positions according to the operation mode selected? • Are the air inlets or air outlets of indoor and outdoor units blocked? • Is the fan speed "LOW"or "SILENT"?

■ The following phenomena do not indicate unit failure.

During heating, the operation indicator blinks and air blow stops	<Operation start> The unit is preparing to blow warm air. Please wait. <In operation> The outdoor unit is defrosting. Please wait.
Hissing or fizzy sounds	Refrigerant flow noise in the pipe or valve sound generated when flow rate is adjusted.
Squeaking noise	Noise generated when the unit expands or contracts due to temperature changes.
Rustling noise	Noise generated with the indoor unit fan's rpm changing such as operation start times.
Clicking noise	Noise of the motorized valve when the unit is switched on.

ENGLISH

INFORMATION

CAPABILITIES

Heating Capability

- This room air conditioner utilizes a heat pump system that absorbs exterior heat and brings it into a room to be heated. As the ambient temperature gets lower, heating capability will also lower. In such a situation, the inverter work to increase compressor rpm to keep the unit's heating capability from decreasing. If the unit's heating performance is still unsatisfactory, other heating appliances should be used to augment this unit's performance.
- The air conditioner is designed to heat an entire room so that it may take some time before you feel warm. Timer operation is recommended for effective preheating ahead of the desired time.

CAUTION

Do not use a stove or any other high temperature devices in proximity to the indoor unit.

PROHIBITION

Cooling and Dehumidifying Capabilities

- If the heat present in a room exceeds the unit's cooling capacity (for example, if there are many people in the room or other heating appliances are used), the preset room temperature may not be reached.

Perking noise	Noise of the ventilation fan sucking in air present in the drain hose and blowing out dehumidifying water that had accumulated in the condensed water collector. For details, consult your sales agent.
Changing operation noise	Operation noise changes due to power variations according to room temperature changes.
Mist emission	Mist is generated as the air within the room is suddenly cooled by conditioned air.
Steam emitted from the outdoor unit	Water generated during defrosting operation evaporates and steam is emitted.
Odors	Caused as the smells and particles of smoke, food, cosmetics, etc. present in room air become attached the unit and blown off into the room again.
The outdoor unit continues to operate even if operation is stopped.	Defrosting is underway (as the heating operation is stopped, the microcomputer checks frost accumulated in the outdoor unit and instructs the unit to perform automatic defrosting if necessary).
The OPERATION lamp is blinking.	Shows preheating or defrosting operation is underway. As the protective circuit or preheat sensor operates when unit operation is stopped during preheating and then restarted, or when operation mode is switched from cooling to heating, the lamp continues to blink.
Does not reach the temperature setting	Actual room temperature may deviate slightly from the remote controller's temperature setting depending on the number of people in the room, indoor or outdoor conditions.

- If the unit still fails to operate normally after performing the above inspections, turn the circuit breaker off and contact your sales agent immediately.

Contact your sales agent immediately if the following phenomena should occur:

- The circuit breaker switches off or the fuse blows frequently.
- The switch operation is not stable.
- Foreign matter or water accidentally enters the unit interior.
- The power cord gets excessively hot or its insulation is torn or stripped.
- TIMER lamp on the indoor unit display blinks.

(As the nature of the failure can be identified by the blinking cycle, check the blinking cycle before turning off the circuit breaker.)

Notes

- In quiet operation or stopping the running, the following phenomena may occasionally occur, but they are not abnormal for the operation.
  (1) Slight flowing noise of refrigerant in the refrigerating cycle.
  (2) Slight rubbing noise from the fan casing which is cooled and then gradually warmed as operation stops.
- The odor will possibly be emitted from the room air conditioner because the various odor, emitted by smoke, foodstuffs, cosmetics and so on, sticks to it. So please clean the air filter and the evaporator regularly to reduce the odor.

- Please contact your sales agent immediately if the air conditioner still fails to operate normally after the above inspections. Inform your agent of the model of your unit, production number, date of installation. Please also inform him regarding the fault.

Please note:
On switching on the equipment, particularly when the room light is dimmed, a slight brightness fluctuation may occur. This is of no consequence.
The conditions of the local Power Supply Companies are to be observed.

CONSTRUCTION AND DIMENSIONAL DIAGRAM

MODEL RAK-18PEC,RAK-25PEC,RAK-35PEC,RAK-50PEC
RAK-25PECC,RAK-35PECC,RAK-50PECC
RAK-10PECI,RAK-14PECI,RAK-20PECI

INDOOR UNIT

Unit : mm

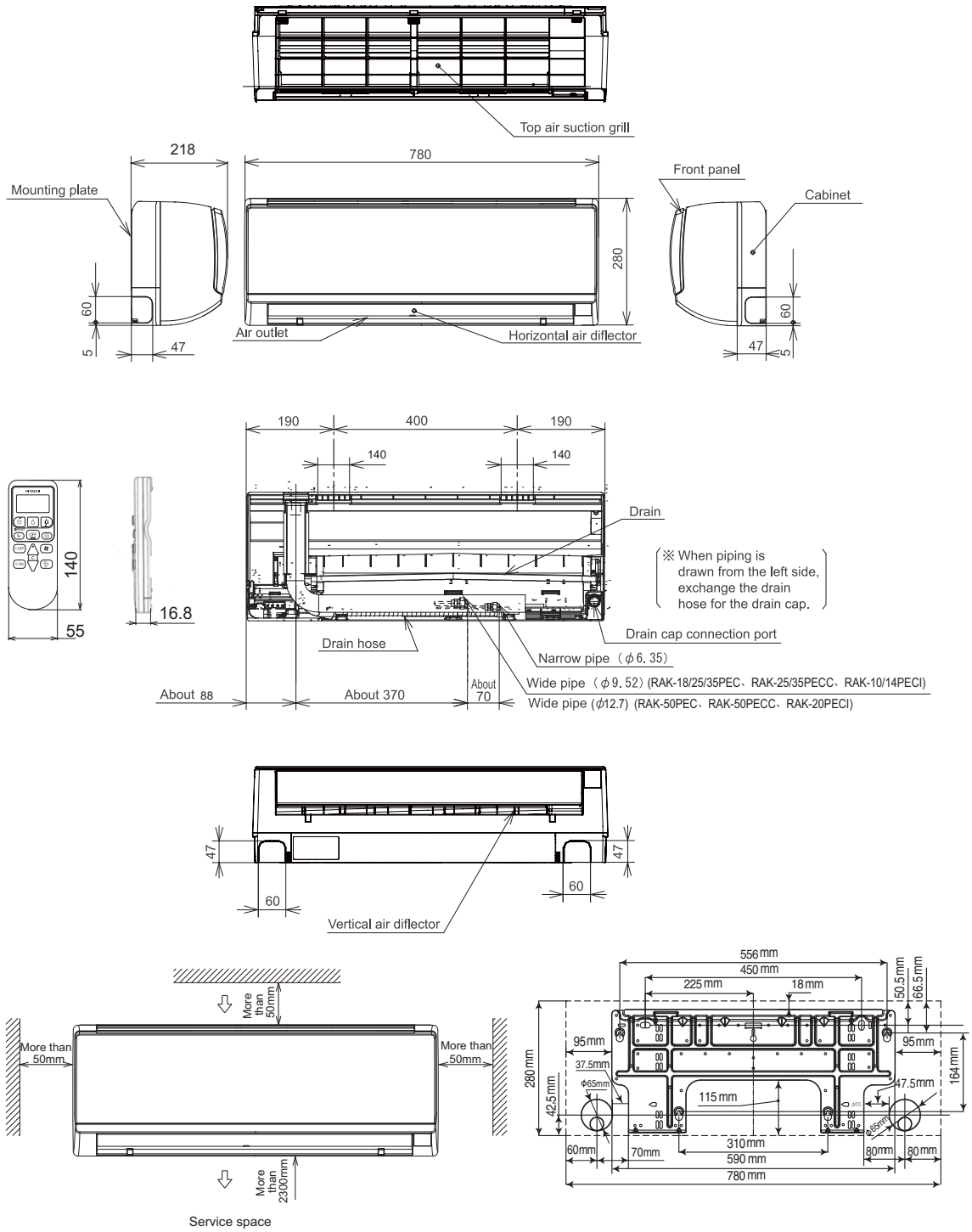

CONSTRUCTION AND DIMENSIONAL DIAGRAM

MODEL RAC-18WEC,RAC-25WEC,RAC-35WEC
RAC-10WECI,RAC-14WECI

OUTDOOR UNIT

Unit : mm

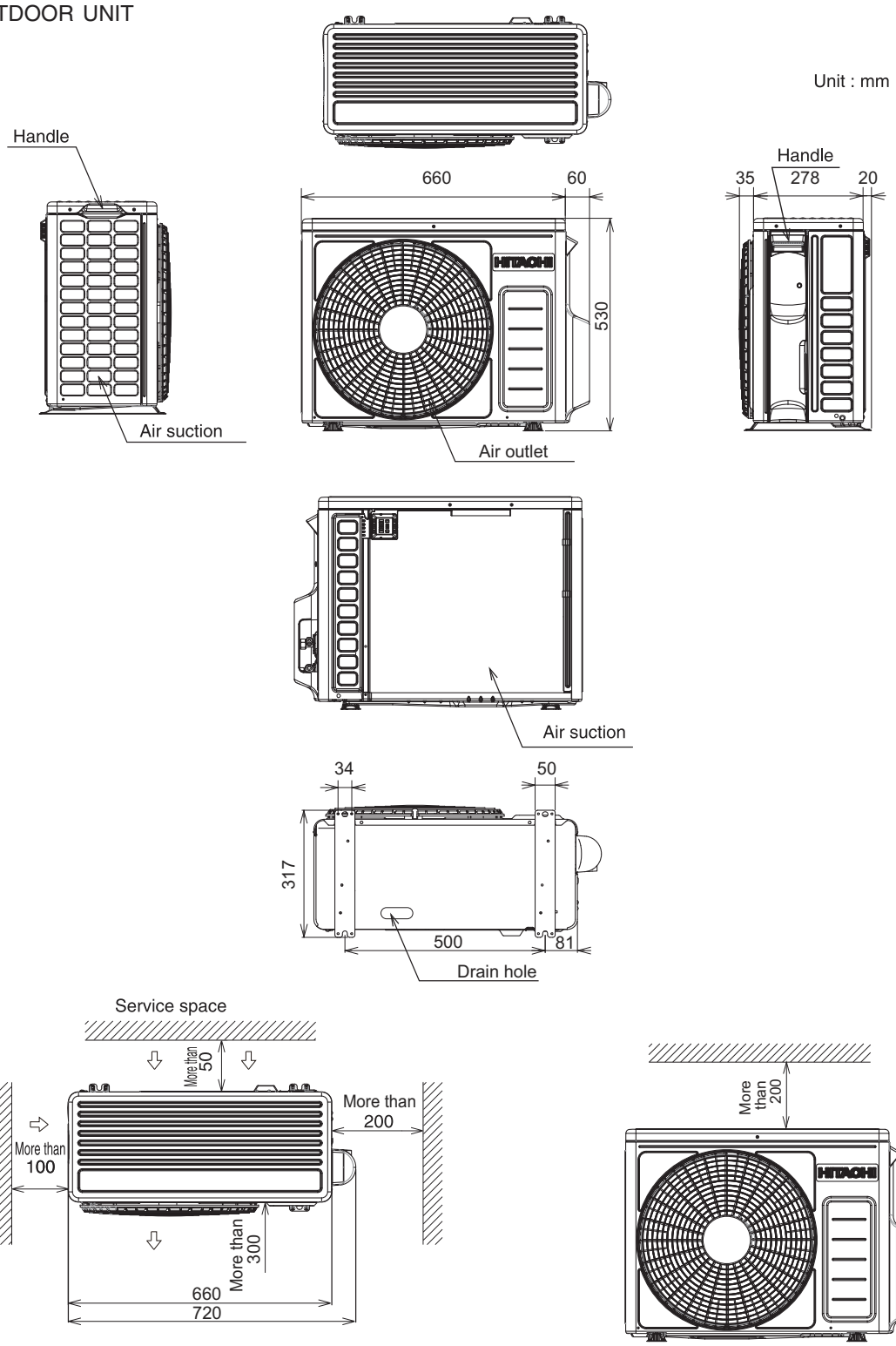

NOTE:

1.For outdoor unit installation , allow at least 2 sides of space around the unit ensure ventilation flue.
2.The connecting pipe , should all the insulated with insulation pipe.
3.Piping length is within 20m.
4.Height different of the piping between the indoor unit and outdoor unit should be within 10m.

CONSTRUCTION AND DIMENSIONAL DIAGRAM

MODEL RAC-50WEC,RAC-20WECI

Unit : mm

OUTDOOR UNIT

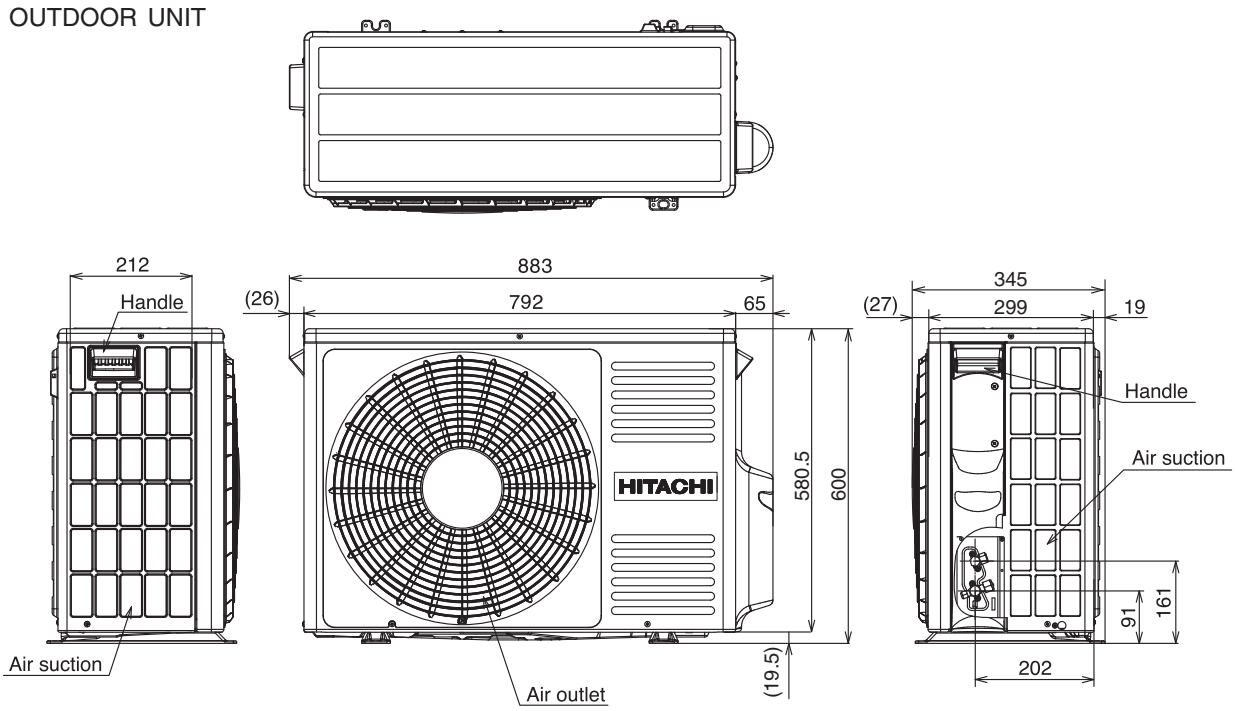

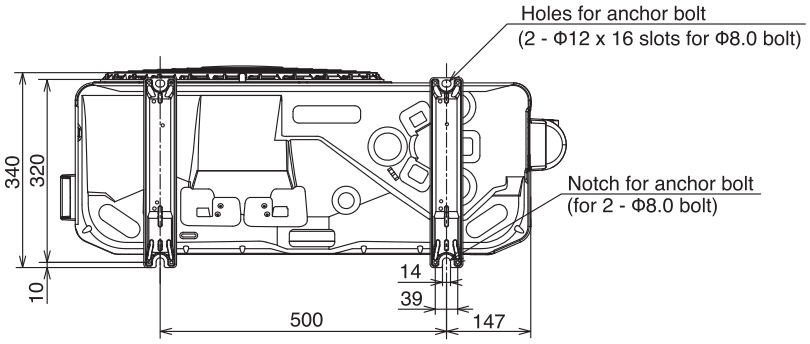

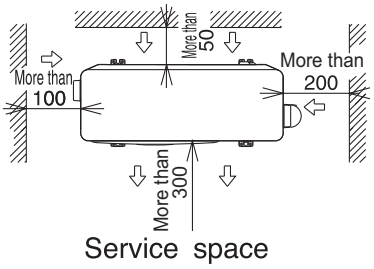

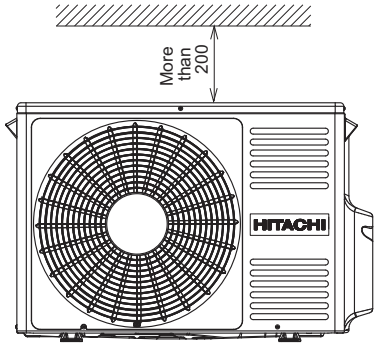

NOTE:

1.For outdoor unit installation , allow at least 2 sides of space around the unit ensure ventilation flue.
2.The connecting pipe , should all the insulated with insulation pipe.
3.Piping length is within 20m.
4.Height different of the piping between the indoor unit and outdoor unit should be within 10m.

MAIN PARTS COMPONENT

THERMOSTAT (Room temperature Thermistor)

Thermostat Specifications

MODEL			RAK-18PEC,RAK-25PEC,RAK-35PEC,RAK-50PEC RAK-25PECC,RAK-35PECC,RAK-50PECC RAK-10PECI,RAK-14PECI,RAK-20PECI	
THERMOSTAT MODEL			IC	
OPERATION MODE			COOL	HEAT
TEMPERATURE ˚C (˚F)	INDICATION 16	ON	15.3 (59.54)	16.7 (62.06)
		OFF	15.0 (59.00)	16.7 (62.06)
	INDICATION 24	ON	23.3 (73.94)	24.7 (76.46)
		OFF	23.0 (73.40)	24.7 (76.46)
	INDICATION 32	ON	31.3 (88.34)	32.7 (90.86)
		OFF	31.0 (87.80)	32.7 (90.86)

FAN MOTOR

Fan Motor Specifications

MODEL	RAK-18/25/35/50PEC RAK-25/35/50PECC RAK-10/14/20PECI	RAC-18/25/35/50WEC RAC-10/14/20WECI
POWER SOURCE	DC : 325V	DC : 120 - 380V
OUTPUT	30W	45W
CONNECTION	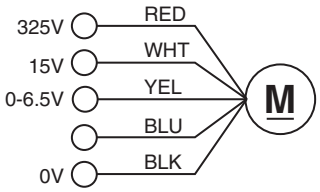 (Control circuit built in)	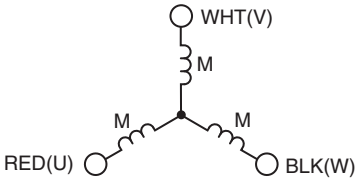

BLU : BLUE	YEL : YELLOW	BRN : BROWN	WHT : WHITE
GRY : GRAY	ORN : ORANGE	GRN : GREEN	RED : RED
BLK : BLACK	PNK : PINK	VIO : VIOLET	

MAIN ELECTRIC COMPONENTS FOR OUTDOOR UNIT

PARTS NAME	RESISTANCE VALUE(Ω)	APPLICABLE MODELS
COIL(REVERSING VALVE)	1350Ω (25 ˚C)	RAC-18/25/35/50WEC、RAC-10/14/20WECI
COIL(EXPANSION VALVE)	49Ω/PHASE (AT 20 ˚C)	RAC-18/25WEC、RAC-10WECI
	46Ω/PHASE (AT 20 ˚C)	RAC-35/50WEC、RAC-14/20WECI
REACTOR	15 (mH) 250 mΩ MAX (20 ˚C)	RAC-18/25/35WEC、RAC-10/14WECI
	5.3 (mH), 67mΩ	RAC-50WEC、RAC-20WECI

COMPRESSOR MOTOR

Compressor Motor Specifications

MODEL		RAC-18/25/35WEC RAC-10/14WECI	RAC-50WEC RAC-20WECI
COMPRESSOR TYPE		ASD084SFNA7JK1	ASG133CDNB7AT
POWER SOURCE		220 - 350 V	220 - 350 V
OUTPUT		681W	1080W
CONNECTION		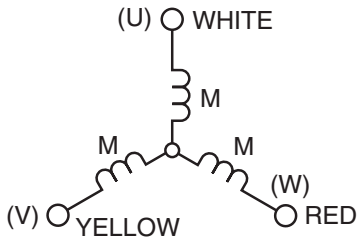	
RESISTANCE VALUE (Ω)	20˚C	2M= 0.74	2M= 2.4
	75˚C	2M= 0.88	2M= 2.0

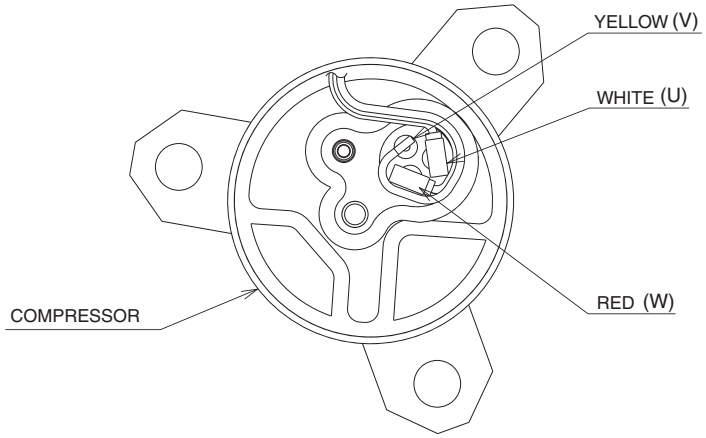

RAC-18/25/35WEC
RAC-10/14WECI

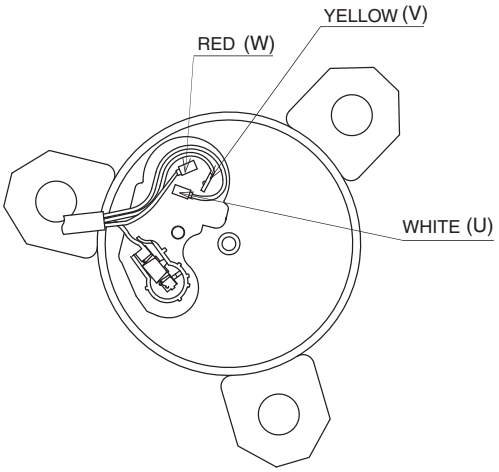

RAC-50WEC
RAC-20WECI

⚠CAUTION

When the refrigerating cycle has been operated for a long time with the capillary tubes clogged or crushed or with too little refrigerant, check the color of the refrigerating machine oil inside the compressor. If the color has been changed conspicuously, replace the compressor.

WIRING DIAGRAM

INDOOR UNIT

MODEL RAK-18/25/35/50PEC
RAK-25/35/50PECC
RAK-10/14/20PECI

WIRING DIAGRAM

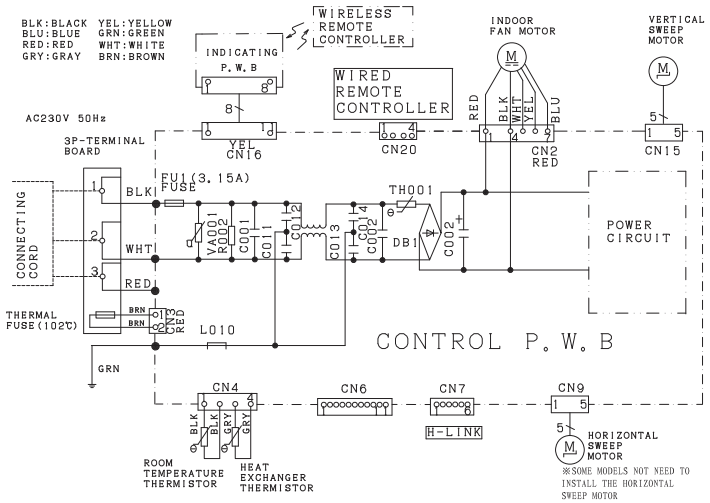

CAUTION ! HIGH VOLTAGE	TURN OFF THE POWER SOURCE DURING THE SERVICE WORK.

OUTDOOR UNIT

MODEL RAC-18/25/35WEC
RAC-10/14WECI

WIRING DIAGRAM

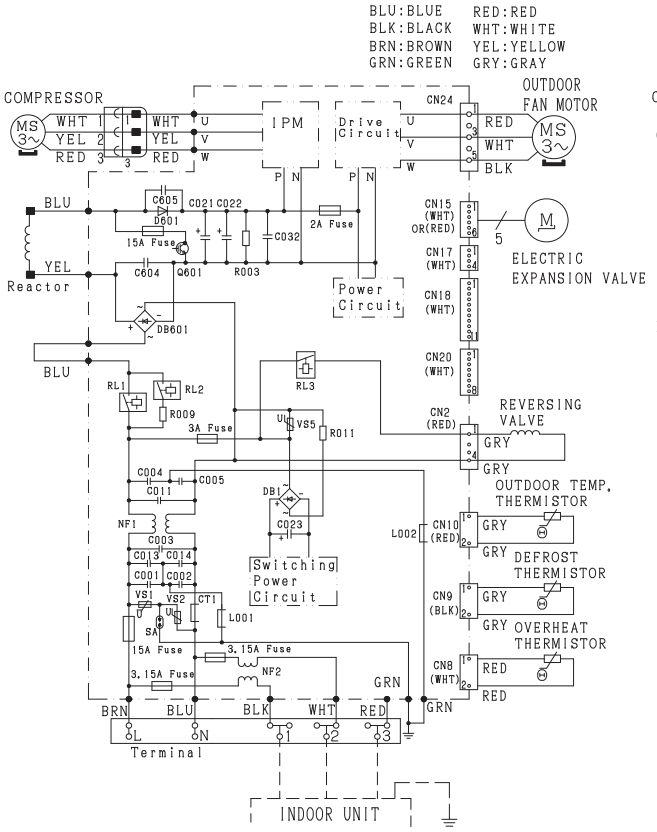

OUTDOOR UNIT

MODEL RAC-50WEC
RAC-20WEC

WIRING DIAGRAM

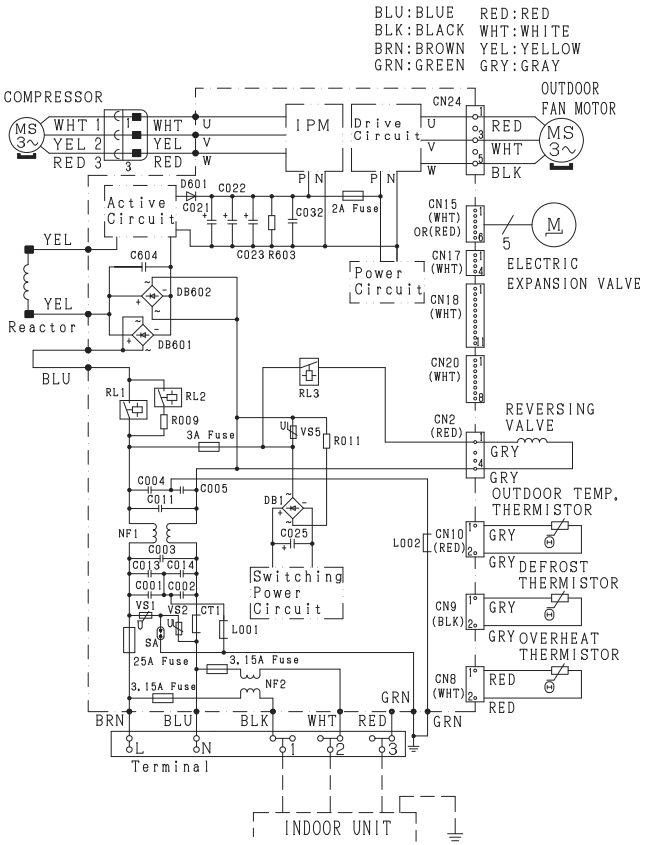

WIRING DIAGRAM OF THE PRINTED WIRING BOARD

[Remote controller] RAR-5F1

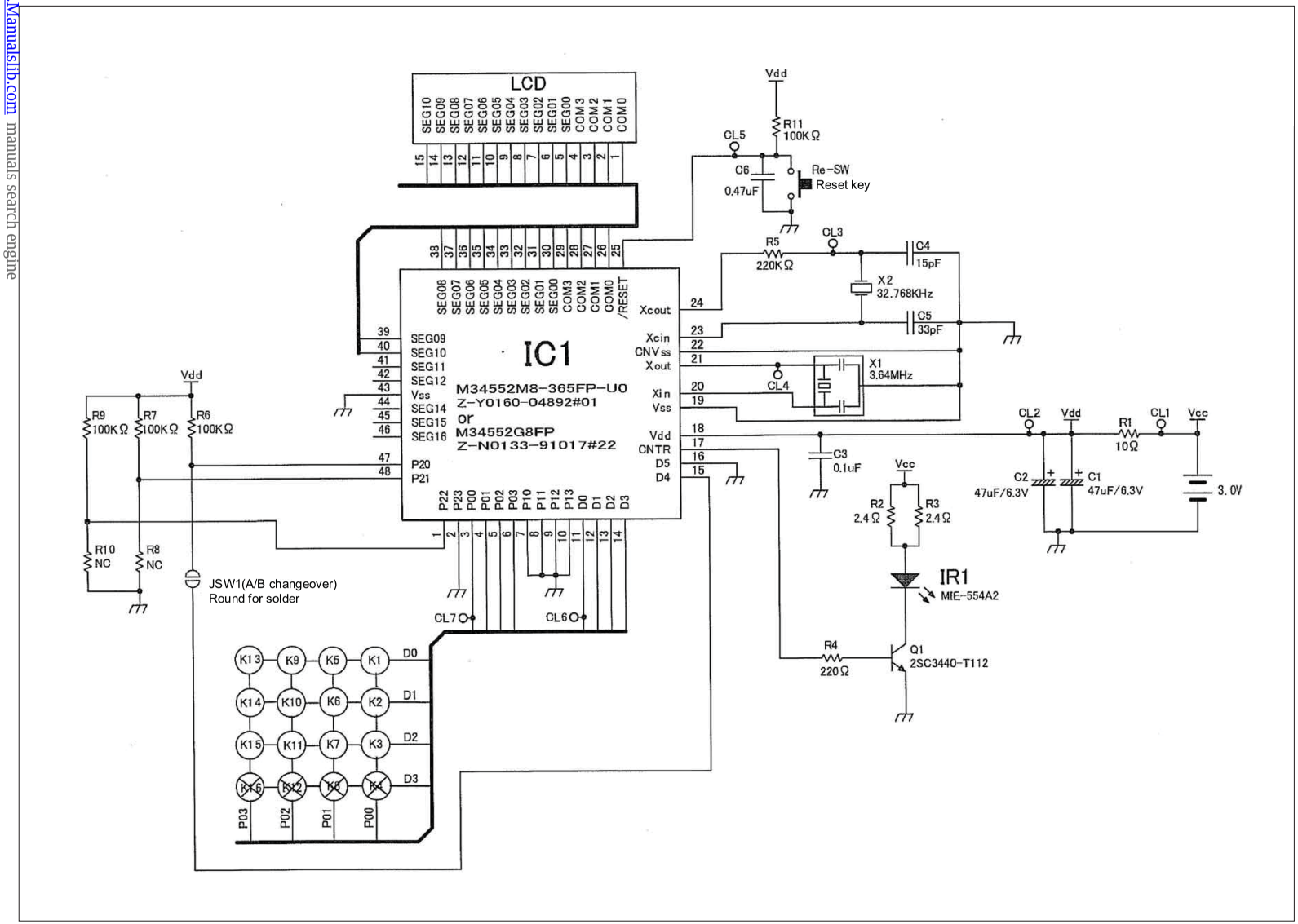

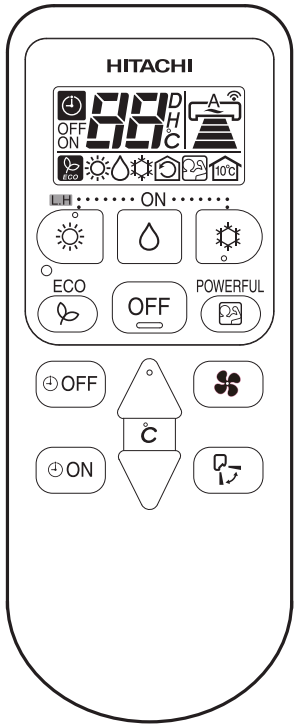

CIRCUIT DIAGRAM

MODEL RAK-18/25/35/50PEC
RAK-25/35/50PECC
RAK-10/14/20PECI

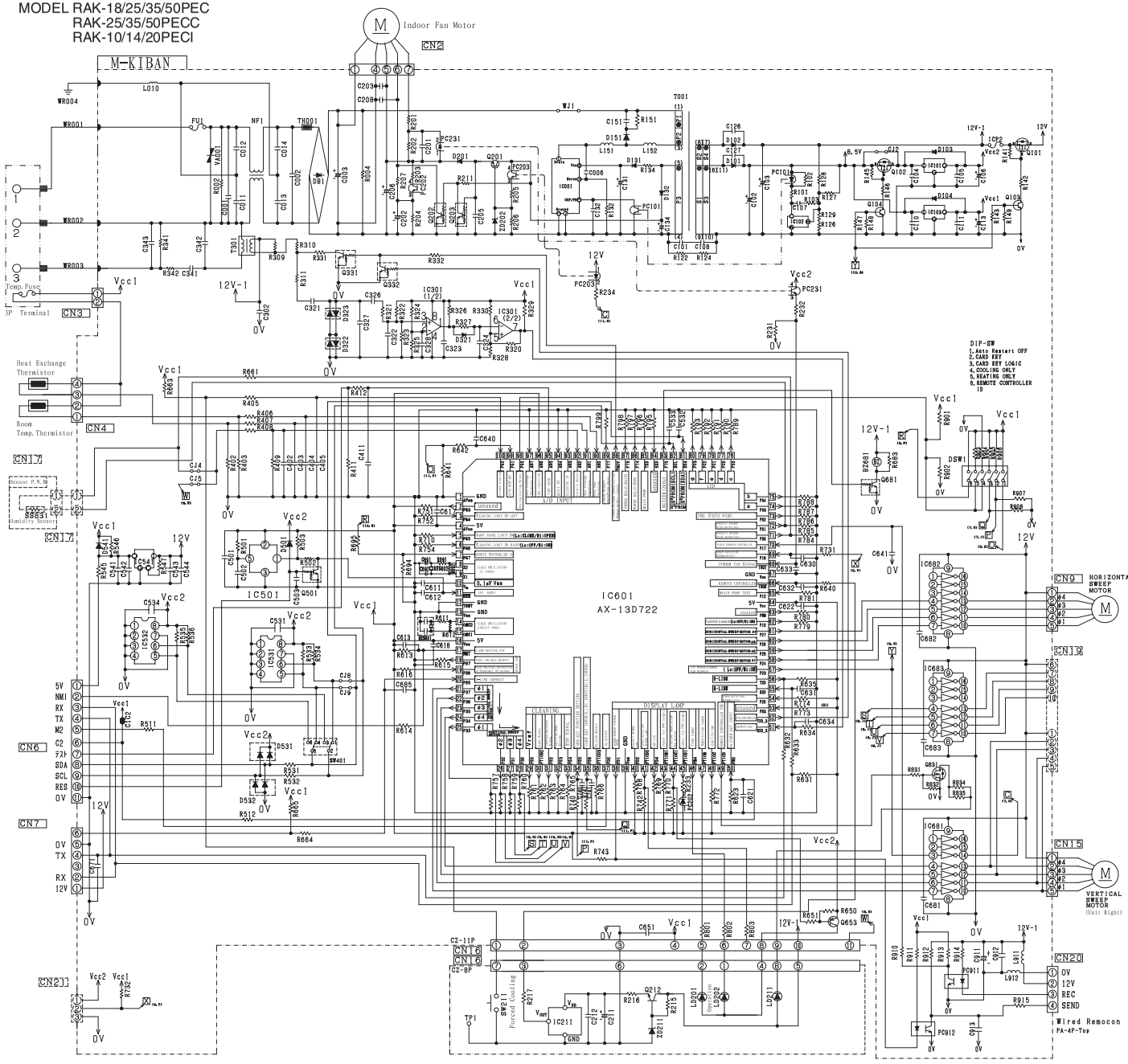

RESISTOR

Symbol/Code	Name/Size	Rating/Tol	Voltage (V)	Place	PCB	Code	Number
R002	680k	5%	1/2	A	M	15	
R004	1M	5%	1/4	A	M	17	BPL
R101	1k	5%	1/4	C	M	31	2026
R102	1.5k	5%	1/16	C	M	50	0603
R103	10k	5%	1/16	C	M	61	0603
R122	10M	5%	1/2	A	M	8	0603
R124	10k	5%	1/2	A	M	8	0603
R126	10k	1%	1/16	C	M	43	0603
R127	390k	1%	1/16	C	M	44	0603
R128	100k	1%	1/16	C	M	46	0603
R129	6.2k	1%	1/16	C	M	47	0603
R132	0.82	5%	1	E	M	7	MOR
R134	22	5%	1/2	A	M	12	MOR
R141	100E	5%	1/16	C	M	63	0603
R142	100E	5%	1/16	C	M	63	0603
R143	3.3E	5%	1/16	C	M	58	0603
R145	5.1E	5%	1/16	C	M	56	0603
R146	5.1E	5%	1/16	C	M	56	0603
R147	5.1E	5%	1/16	C	M	56	0603
R148	5.1E	5%	1/16	C	M	56	0603
R149	3.3E	5%	1/16	C	M	58	0603
R151	960k	5%	2	E	M	9	
R201	4.3k	5%	1/4	C	M	20	3216
R202	4.3k	5%	1/16	C	M	50	0603
R203	4.7k	5%	1/8	C	M	30	3225
R204	3.3k	5%	1/16	C	M	52	0603
R205	402	1%	1/8	C	M	31	3225
R206	330	5%	1/16	C	M	62	0603
R207	100	5%	1/16	C	M	64	0603
R211	15k	5%	1/16	C	M	65	0603
R213	3.7k	5%	1/16	C	E	1	0603
R216	47	5%	1/16	C	E	7	0603
R217	1k	5%	1/16	C	E	8	0603
R231	10k	5%	1/16	C	M	60	0603
R232	1k	5%	1/16	C	M	61	0603
R233	560	5%	1/8	C	M	34	3225
R234	1.5k	5%	1/16	C	M	20	3216
R309	680	5%	1/4	C	M	24	3216
R310	180	5%	1/8	C	M	33	3225
R311	330	5%	1/16	C	M	62	0603
R321	51k	1%	1/16	C	M	70	0603
R322	1k	5%	1/16	C	M	61	0603
R323	10k	1%	1/16	C	M	73	0603
R324	10k	1%	1/16	C	M	73	0603
R325	7.15k	1%	1/16	C	M	71	0603
R326	3.83k	1%	1/16	C	M	69	0603
R327	5.1k	1%	1/16	C	M	83	0603
R328	51k	5%	1/4	C	M	20	3216
R329	1k	5%	1/16	C	M	61	0603
R330	10k	5%	1/16	C	M	60	0603
R331	510	5%	1/4	C	M	23	3216
R332	5.6k	1%	1/16	C	M	77	0603
R341	470k	5%	1/4	A	M	16	
R342	47	5%	1/2	A	M	10	
R402	15.7k	1%	1/16	C	M	14	0805
R403	15.7k	1%	1/16	C	M	14	0805
R405	1k	5%	1/16	C	M	61	0603
R406	1k	5%	1/16	C	M	61	0603
R407	1k	5%	1/16	C	M	61	0603
R408	1k	5%	1/16	C	M	61	0603
R409	10k	5%	1/16	C	M	60	0603
R501	1k	5%	1/16	C	M	61	0603
R502	1k	5%	1/16	C	M	61	0603
R503	360k	5%	1/16	C	M	66	0603
R511	1k	5%	1/16	C	M	61	0603
R512	1k	5%	1/16	C	M	61	0603
R531	390	5%	1/16	C	M	62	0603
R532	390	5%	1/16	C	M	62	0603
R533	5.1k	5%	1/16	C	M	56	0603
R534	5.1k	5%	1/16	C	M	56	0603
R535	5.1k	5%	1/16	C	M	56	0603
R536	5.1k	5%	1/16	C	M	56	0603
R545	0	5%	1/16	C	M	48	0603
R546	0	5%	1/16	C	M	48	0603
R547	0	5%	1/16	C	M	48	0603
R611	0	5%	1/16	C	M	79	0603
R612	5k	1%	1/16	C	M	77	0603
R613	10k	5%	1/16	C	M	60	0603
R614	100	5%	1/16	C	M	52	0603
R615	10k	5%	1/16	C	M	60	0603
R616	10k	5%	1/16	C	M	61	0603
R623	10k	5%	1/16	C	M	60	0603
R631	10k	5%	1/16	C	M	60	0603
R632	10k	5%	1/16	C	M	60	0603
R633	1k	5%	1/16	C	M	61	0603
R634	10k	5%	1/16	C	M	60	0603
R635	10k	5%	1/16	C	M	60	0603
R640	1k	5%	1/16	C	M	61	0603
R641	10k	5%	1/16	C	M	60	0603
R642	1k	5%	1/16	C	M	61	0603
R650	2.2k	5%	1/16	C	M	67	0603
R651	4.3k	5%	1/16	C	M	66	0603
R661	47k	1%	1/16	C	M	74	0603
R662	10k	5%	1/16	C	M	60	0603
R663	1k	5%	1/16	C	M	61	0603
R664	1k	5%	1/16	C	M	61	0603
R683	3.3k	5%	1/16	C	M	58	0603
R691	1M	5%	1/16	C	M	54	0603
R692				C	M	54	0603
R694	10k	5%	1/16	C	M	60	0603
R695	1k	5%	1/16	C	M	61	0603
R710	10k	5%	1/16	C	M	60	0603
R731	1k	5%	1/16	C	M	61	0603
R732	10k	5%	1/16	C	M	60	0603
R743	10k	5%	1/16	C	M	60	0603
R744	10k	5%	1/16	C	M	60	0603
R745	10k	5%	1/16	C	M	60	0603
R746	10k	5%	1/16	C	M	60	0603
R747	10k	5%	1/16	C	M	60	0603
R748	10k	5%	1/16	C	M	60	0603
R749	10k	5%	1/16	C	M	60	0603
R751	10k	5%	1/16	C	M	60	0603
R752	10k	5%	1/16	C	M	60	0603
R753	10k	5%	1/16	C	M	60	0603
R754	10k	5%	1/16	C	M	60	0603
R757	10k	5%	1/16	C	M	60	0603
R758	10k	5%	1/16	C	M	60	0603
R759	10k	5%	1/16	C	M	60	0603
R760	10k	5%	1/16	C	M	60	0603
R761	10k	5%	1/16	C	M	60	0603
R762	10k	5%	1/16	C	M	60	0603

RESISTOR

Symbol/Code	Name/Size	Rating/Tol	Voltage (V)	Place	PCB	Code	Number
R763	10k	5%	1/16	C	M	60	0603
R764	10k	5%	1/16	C	M	60	0603
R765	10k	5%	1/16	C	M	60	0603
R766	10k	5%	1/16	C	M	60	0603
R768	10k	5%	1/16	C	M	60	0603
R769	10k	5%	1/16	C	M	60	0603
R770	10k	5%	1/16	C	M	60	0603
R771	10k	5%	1/16	C	M	60	0603
R772	10k	5%	1/16	C	M	60	0603
R773	10k	5%	1/16	C	M	60	0603
R774	10k	5%	1/16	C	M	60	0603
R778	10k	5%	1/16	C	M	60	0603
R780	10k	5%	1/16	C	M	60	0603
R781	10k	5%	1/16	C	M	60	0603
R784	10k	5%	1/16	C	M	60	0603
R785	10k	5%	1/16	C	M	60	0603
R786	10k	5%	1/16	C	M	60	0603
R787	10k	5%	1/16	C	M	60	0603
R788	10k	5%	1/16	C	M	60	0603
R789	10k	5%	1/16	C	M	60	0603
R790	10k	5%	1/16	C	M	60	0603
R791	10k	5%	1/16	C	M	60	0603
R793	10k	5%	1/16	C	M	60	0603
R795	10k	5%	1/16	C	M	60	0603
R796	10k	5%	1/16	C	M	60	0603
R797	10k	5%	1/16	C	M	60	0603
R798	10k	5%	1/16	C	M	60	0603
R799	10k	5%	1/16	C	M	60	0603
R801	300	5%	1/16	C	M	53	0603
R802	390	5%	1/16	C	M	62	0603
R803	390	5%	1/16	C	M	62	0603
R807	10k	5%	1/16	C	M	60	0603
R902	1k	5%	1/16	C	M	61	0603
R903	1k	5%	1/16	C	M	61	0603
R904	1k	5%	1/16	C	M	61	0603
R905	1k	5%	1/16	C	M	61	0603
R906	1k	5%	1/16	C	M	61	0603
R907	30k	5%	1/16	C	M	68	0603
R908	30k	5%	1/16	C	M	68	0603
R910	1k	5%	1/16	C	M	61	0603
R911	10k	5%	1/16	C	M	60	0603
R912	560	5%	1/16	C	M	64	0603
R913	2k	5%	1/2	C	M	25	MOR
R914	1k	5%	1/16	C	M	61	0603
R914	1.2k	5%	1/4	C	M	26	3216
R915	620	5%	1/16	C	M	50	0603
R931	10k	5%	1/16	C	M	60	0603
R932	10k	5%	1/16	C	M	60	0603
R933	10k	5%	1/16	C	M	60	0603
R934	51	5%	1/2	C	M	38	MOR
R935	51	5%	1/2	C	M	38	MOR
R941	10k	5%	1/16	C	M	60	0603
R942	10k	5%	1/16	C	M	60	0603
R943	10k	5%	1/16	C	M	60	0603
R944	10k	5%	1/16	C	M	60	0603
R945	10k	5%	1/16	C	M	60	0603
R946	10k	5%	1/16	C	M	60	0603
R947	10k	5%	1/16	C	M	60	0603
R948	10k	5%	1/16	C	M	60	0603
R949	10k	5%	1/16	C	M	60	0603
R950	10k	5%	1/16	C	M	60	0603
R951	10k	5%	1/16	C	M	60	0603
R952	10k	5%	1/16	C	M	60	0603
R953	10k	5%	1/16	C	M	60	0603
R954	10k	5%	1/16	C	M	60	0603
R955	10k	5%	1/16	C	M	60	0603
R956	10k	5%	1/16	C	M	60	0603
R957	10k	5%	1/16	C	M	60	0603
R958	10k	5%	1/16	C	M	60	0603
R959	10k	5%	1/16	C	M	60	0603
R960	10k	5%	1/16	C	M	60	0603
R961	10k	5%	1/16	C	M	60	0603
R962	10k	5%	1/16	C	M	60	0603
R963	10k	5%	1/16	C	M	60	0603
R964	10k	5%	1/16	C	M	60	0603
R965	10k	5%	1/16	C	M	60	0603
R966	10k	5%	1/16	C	M	60	0603
R967	10k	5%	1/16	C	M	60	0603
R968	10k	5%	1/16	C	M	60	0603
R969	10k	5%	1/16	C	M	60	0603
R970	10k	5%	1/16	C	M	60	0603
R971	10k	5%	1/16	C	M	60	0603
R972	10k	5%	1/16	C	M	60	0603
R973	10k	5%	1/16	C	M	60	0603
R974	10k	5%	1/16	C	M	60	0603
R975	10k	5%	1/16	C	M	60	0603
R976	10k	5%	1/16	C	M	60	0603
R977	10k	5%	1/16	C	M	60	0603
R978	10k	5%	1/16	C	M	60	0603
R979	10k	5%	1/16	C	M	60	0603
R980	10k	5%	1/16	C	M	60	0603
R981	10k	5%	1/16	C	M	60	0603
R982	10k	5%	1/16	C	M	60	0603
R983	10k	5%	1/16	C	M	60	0603
R984	10k	5%	1/16	C	M	60	0603
R985	10k	5%	1/16	C	M	60	0603
R986	10k	5%	1/16	C	M	60	0603
R987	10k	5%	1/16	C	M	60	0603
R988	10k	5%	1/16	C	M	60	0603
R989	10k	5%	1/16	C	M	60	0603
R990	10k	5%	1/16	C	M	60	0603
R991	10k	5%	1/16	C	M	60	0603
R992	10k	5%	1/16	C	M	60	0603
R993	10k	5%	1/16	C	M	60	0603
R994	10k	5%	1/16	C	M	60	0603
R995	10k	5%	1/16	C	M	60	0603
R996	10k	5%	1/16	C	M	60	0603
R997	10k	5%	1/16	C	M	60	0603
R998	10k	5%	1/16	C	M	60	0603
R999	10k	5%	1/16	C	M	60	0603
R1000	10k	5%	1/16	C	M	60	0603
R1001	10k	5%	1/16	C	M	60	0603
R1002	10k	5%	1/16	C	M	60	0603
R1003	10k	5%	1/16	C	M	60	0603
R1004	10k	5%	1/16	C	M	60	0603
R1005	10k	5%	1/16	C	M	60	0603
R1006	10k	5%	1/16	C	M	60	0603
R1007	10k	5%	1/16	C	M	60	0603
R1008	10k	5%	1/16	C	M	60	0603
R1009	10k	5%	1/16	C	M	60	0603
R1010	10k	5%	1/16	C	M	60	0603
R1011	10k	5%	1/16	C	M	60	0603
R1012	10k	5%	1/16	C	M	60	0603
R1013	10k	5%	1/16	C	M	60	0603
R1014	10k	5%	1/16	C	M	60	0603
R1015	10k	5%	1/16	C	M	60	0603
R1016	10k	5%	1/16	C	M	60	0603
R1017	10k	5%	1/16	C	M	60	0603

Capacitor

Symbol/Code	Name/Size	Rating/Tol	Voltage (V)	Type	Place	PCB	Code	Number
C101	0.33μ	M250	F	B	M	14	0.4W	MOR
C102	0.47μ	M275	F	B	M	14	0.4W	MOR
C103	82μ	450	D	M	M	12	CV	
C106	22μ	6.3V	C	M	M	21	SL	
C111	0.1μ	M250	C	B	M	16		F
C112	0.1μ	M250	C	B	M	16		F
C113	2.2μ	M250	C	B	M	16		F
C114	2.2μ	M250	C	B	M	16		F
C121	470μ	M250	C	B	M	18		F
C122	680μ	16	D	B	M	19	SLR	
C123	1500μ	16	D	B	M	19	YXA	
C124	1.0μ	25	C	C	M	107	0805	F
C125	0.1μ	25	C	C	M	107	0805	F
C126	220μ	16	C	B	M	20	YXA	
C127	470μ	M250	C	B	M	18		F
C130	1μ	25	C	C	M	109	0805	F
C131	1μ	25	C	C	M	109	0805	F
C132	330μ	50	C	C	M	127	YXA	
C133	220μ	16	C	B	M	22		K
C134	100μ	50	C	C	M	11	YXA	
C151	220μ	16	C	B	M	22		K
C201	1000μ	50	C	C	M	103	0805	B
C202	10μ	16	D	B	M	121	TA	
C203	0.1μ	25	C	C	M	107	0805	F
C205	1000μ	50	C	C	M	103	0805	B
C206	4.7μ	25	D	B	M	124	TA	
C208	0.1μ	25	C	C	M	107	0805	F
C211	47μ	16	D	B	M	11	M	
C212	1μ	50	C	C	M	109	0805	F
C302	0.1μ	25	C	C	M	107	0805	F
C303	0.022μ	50	C	C	M	105	0805	B
C320	2200p	50	C	C	M	104	0805	B
C323	0.1μ	16	C	C	M	109	0805	F
C324	0.1μ	16	C	C	M	87	0805	B
C326	0.022μ	50	C	C	M	105	0805	B
C327	47μ	50	C	C	M	80	0805	CB
C328	0.1μ	16	C	C	M	108	0805	F
C341	0.1μ	M250	F	B	M	15	M	MOR
C342	0.022μ	50	F	B	M	111	TD	MOR
C343	470μ	M250	C	B	M	21		F
C402	0.47μ	16	C	C	M	87	0805	B
C403	0.1μ	25	C	C	M	107	0805	F
C404	0.1μ	25	C	C	M	107	0805	F
C405	0.1μ	16	C	C	M	108	0805	F
C411	0.1μ	16	C	C	M	108	0805	F
C501	0.1μ	16	C	C	M	108	0805	F
C502	0.1μ	16	C	C	M	108	0805	F
C503	0.1μ	16	C	C	M	108	0805	F
C531	0.1μ	16	C	C	M	108	0805	F
C532	50	C	C	C	M	80	0805	CB
C533	50	C	C	C	M	80	0805	CB
C534	4.7μ	16	C	C	M	88	0805	F
C541		16	C	C	M		0805	
C542	47μ	16	C	C	M	147	3216	B
C543		25	C	C	M		0805	
C544	4.7μ	25	C	C	M	147	0805	F
C601	0.1μ	16	C	C	M	108	0805	F
C602	0.1μ	16	C	C	M	108	0805	F
C603	0.1μ	16	C	C	M	108	0805	F
C604	0.1μ	16	C	C	M	108	0805	F
C605	0.1μ	16	C	C	M	108	0805	F
C606	0.1μ	16	C	C	M	108	0805	F
C607	0.1μ	16	C	C	M	108	0805	F
C608	0.1μ	16	C	C	M	108	0805	F
C609	0.1μ	16	C	C	M	108	0805	F
C610	0.1μ	16	C	C	M	108	0805	F
C611	0.1μ	16	C	C	M	108	0805	F
C612	0.1μ	16	C	C	M	108	0805	F
C613	0.1μ	16	C	C	M	108	0805	F
C617	0.1μ	25	C	C	M	107	0805	F

Capacitor

Symbol/Code	Name/Size	Rating/Tol	Voltage (V)	Type	Place	PCB	Code	Number
C618	0.1μ	25	C	C	M	107	0805	F
C621	0.1μ	16	C	C	M	108	0805	F
C622	0.1μ	25	C	C	M	107	0805	F
C630	0.1μ	25	C	C	M	107	0805	F
C631	1000p	50	C	C	M	81	0805	CB
C632	1000p	50	C	C	M	103	0805	B
C633	1000p	50	C	C	M	103	0805	B
C634	0.022μ	50	C	C	M	105	0805	B
C640	0.1μ	16	C	C	M	108	0805	F
C641	1000μ	50	C	C	M	103	0805	B
C651	0.1μ	16	C	C	M	108	0805	F
C671	1000μ	50	C	C	M	81	0805	CB
C681	0.1μ	25	C	C	M	107	0805	F
C682	0.1μ	25	C	C	M	107	0805	F
C683	0.1μ	25	C	C	M	107	0805	F
C685	0.1μ	25	C	C	M	107	0805	F
C691	15μ	50	C	C	M	111	0805	CB
C692	15μ	50	C	C	M	111	0805	CB
C740	0.1μ	25	C	C	M	107	0805	F
C741	0.1μ	25	C	C	M	107	0805	F
C911	100μ	25	D	B	M	126	LXI	
C912	0.1μ	25	C	C	M	107	0805	F
C913	1000μ	50	C	C	M	103	0805	B

Diode

Symbol/Code	Model	Place	PCB	Code	Number
D101	02L20U		M	16	
D102	02L20U		M	27	
D103	KDG214BU		C	M	101
D104	KDG214BU		C	M	101
D131	01WJ40U		A	M	100
D132	01WJ20U		A	M	100
D151	DG01CV1		A	M	100
D201	KDG214BU		C	M	101
D321	KDG214BU		C	M	101
D322	KDG226		C	M	102
D323	KDG226		C	M	102
D501	KDG214BU		C	M	101
D531	KDG184		C	M	104
D532	KDG181		C	M	105
D541	KDG214BU		C	M	101
D81	DG0B40		M	M	20

Zener Diode

Symbol/Code	Model	Place	PCB	Code	Number
ZD101	RKZ162KU		C	M	126
ZD102	RKZ162KU		C	M	126
ZD201	RD5.6UZ		C	B	15

Transistor

Symbol/Code	Model	Place	PCB	Code	Number
Q101	RN2402FV13		C	M	155
Q102	2SD2414-F		C	M	140
Q103	2SC3852S-GR-BTK		C	M	137
Q104	2SC3852S-GR-BTK		C	M	137
Q201	2SC5011		C	M	135
Q202	RN1107FB05L		C	M	136
Q203	RN1402FB05L		C	M	139
Q212	2SK2412-R		C	B	14
Q331	RN1107FB05L		C	M	136
Q332	RN1107FB05L		C	M	136
Q501	RN1102FB05L		C	M	136
Q653	KTA2012B		C	M	140
Q681	RN1102FB05L		C	M	136
Q691	2SC1430		C	M	150

IC

Symbol/Code	Model	Place	PCB	Code	Number
IC101	BTA-B0G51B		M	M	25
IC131	BUM7050LL		S	M	146
IC132	LA6314		S	M	145
IC133	BU1203AAA		S	M	152
IC501	KIA393F-BL/P		S	M	147
IC501	80P4C2MMC-EK7QS		S	M	148
IC511	BC4HC-TB		S	M	149
IC512	BC4HC-TB		S	M	149
IC514	BU9884		S	M	149
IC531	BD4F3M100WY		S	M	150
IC681	BLM2033AMRB		S	M	151
IC682	BLM2033AMRB		S	M	151
IC683	BLM2033AMRB		S	M	151

Photo Coupler

Symbol/Code	Model	Place	PCB	Code	Number
PC101	PS2501AL-1		S	M	173
PC102	PS2501AL-1		S	M	173
PC203	PS2501AL-1		S	M	173
PC231	PS2501AL-1		S	M	173
PC911	PS2501AL-1		S	M	173
PC912	PS2501AL-1		S	M	173

WIRE

Symbol/Code	Model	Place	PCB	Code	Number
RW001	0.5mm²		E	M	70
RW002	0.5mm²		E	M	71
RW003	0.5mm²		E	M	72
RW004	0.5mm²		E	M	73
WJ1	0.5mm²		E	M	75

Coil

Symbol/Code	Model	Place	PCB	Code	Number
L010	FBA04A640B8-00	A	M	170	
L151	FBA04A640B8-00	A	M	170	
L152	FBA04A640B8-00	A	M	170	
L211	BLC13N1	A	M	171	
L212	BLC13N1	A	M	171	
MP1	BS11YL-10160		M	M	34
T301	RT4521B		M	M	36
T501	VPNLP		M	M	35

VARISTOR

Symbol/Code	Model	Place	PCB	Code	Number
VA001	450N12S		E	M	30

Transformer

Symbol/Code	Model	Place	PCB	Code	Number
T601	D32-S8LCM		E	M	31

Photic Unit

Symbol/Code	Model	Place	PCB	Code	Number
IC511	SP1UMC61BK		E	E	13

LED

Symbol/Code	Model	Place	PCB	Code	Number
LD101	SLR-332VC3F		E	E	8
LD102	SLR-332VC3F		E	E	8
LD211	SLR-344TS3F		E	E	9

Buzzer

Symbol/Code	Model	Place	PCB	Code	Number
BZ501	PBT720FH2		E	M	45

CONNECTER

Symbol/Code	Model	Place	PCB	Code	Number
CN2	EC(7-2.3)B-3F-A		E	M	50
CN3	HCG9-FA8E-1		E	M	51
CN4	E4B-FB-E-B		E	M	52
CN6	S11B-CUVE-B-1		E	M	53
CN7	HCG6-FA8E-1		E	M	54
CN9	S5B-FB-E-K		E	M	57
CN13	S11B-CUVE-B-1		E	M	53
CN16	S11B-CUVE-B-1		E	M	53
CN17			E	M	
CN18	S11B-CUVE-B-1		E	M	
CN20	E4B-FA8E-1		E	M	60
CN21			E	M	107
TP11	KT-S11-1.3B		E	M	117

Switch

Symbol/Code	Model	Place	PCB	Code	Number
SW401	SLS-35-4STTAV		E	M	97
SW21	KS102		M	M	66
SW211	KSM4138		M	M	11

Oscillator

Symbol/Code	Model	Place	PCB	Code	Number
X3601	CSTLS[UMG53-A0		M	M	175
X3602	MX2125A		C	M	176

Over Current Protecter

Symbol/Code	Model	Place	PCB	Code	Number
F01	250V 8.15A		E	M	39
ICP2	SSR6S250V(1.25A)	C	M	115	0805

CHIP JUMPER

Symbol/Code	Model	Place	PCB	Code	Number
CJ2	0	5% 1/10	C	M	48 0805
CJ4	0	5% 1/16	C	M	48 0805
CJ5	0	5% 1/16	C	M	48 0805
CJ8	0	5% 1/16	C	M	48 0805
CJ9	0	5% 1/16	C	M	48 0805

MODEL RAC-18/25/35WEC
RAC-10/14WECI

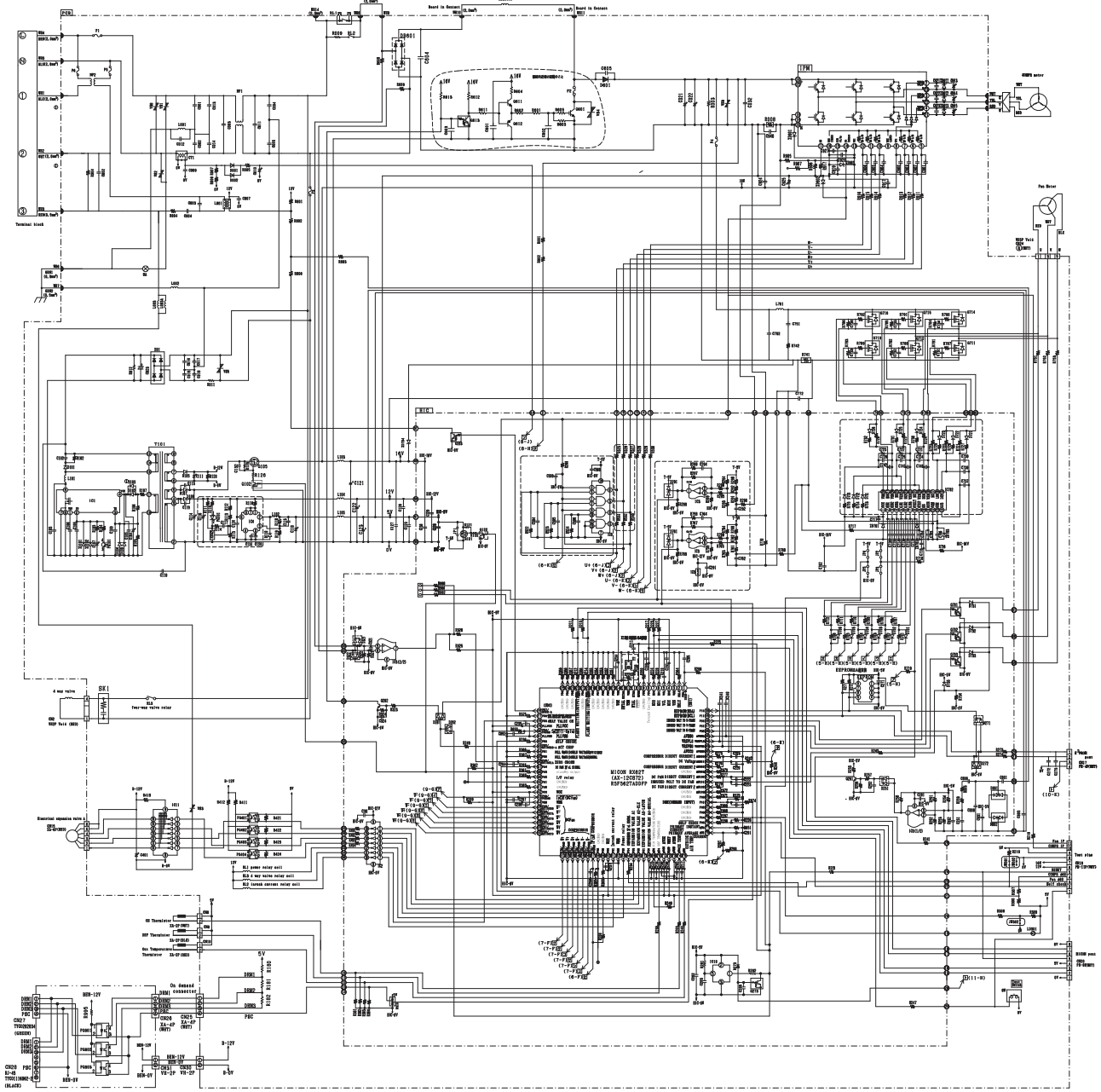

Mounting PCB
M: Main PCB(MMBOARD-AS)

Way of mount mark
A: Axial inserter
R: Radial inserter
R: Radial inserter(7.5mm pitch)
H: Hand insertion
C: Chip

Resistance

Symbol	Resistance(Ω)	Tolerance	Power (W)	Mounting forming	Mounting board	Mounting surface	Part No. Assembly	Remarks
R001	180K	0.5%	1/2	A	M		14	
R002	180K	0.5%	1/2	A	M		14	
R003	470K	5%	1/2	A	M		11	
R004	470K	5%	1/4	A	M		24	
R005	1.96K	1%	1/6	A	M		50	
R006	1K	1%	1/6	A	M		49	
R007	20	1%	1/6	A	M		46	
R008	25m	5%	10	H	M		7	
R009	100	5%	10	H	M		6	
R011	2.2	5%	5	H	M		9	
R012	~~1M~~	5%	1/4	A	M			
R102	100K	5%	2	R	M		10	BPR
R103	1K	5%	1/10	C	M		38	1608
R104	1.8K	5%	1/6	A	M		19	
R105	47K	5%	1/6	A	M		20	
R106	68K	5%	1/6	A	M		21	
R107	JUMPER			A	M			
R110	1K	5%	1/10	C	M		38	1608
R111	2.2K	5%	1/6	A	M		22	
R112	33K	1%	1/6	A	M		23	
R113	5.1K	1%	1/6	A	M		25	
R114	470	5%	1/2	A	M		26	
R115	10K	1%	1/6	A	M		27	
R116	0.62	2%	1/4	A	M		28	
R118	8.2K	0.5%	1/6	A	M		29	
R119	2.7K	0.5%	1/6	A	M		30	
R120	20K	5%	1/6	A	M		12	
R121	10K	5%	1/16	C	HIC	A	12	1005
R122	5.1K	5%	1/16	C	HIC	A	16	1005
R125	100K	5%	1/10	C	M	B	45	1608
R126	100K	5%	1/10	C	M	B	45	1608
R180		5%	1/10	C	M	B		1608
R181		5%	1/10	C	M	B		1608
R182		5%	1/10	C	M	B		1608
R200	10K	1%	1/16	C	HIC	B	13	1005
R201	510	5%	1/16	C	HIC	B	7	1005
R203	100	5%	1/16	C	HIC	B	8	1005
R206	5.1K	5%	1/16	C	HIC	B	16	1005
R208	10K	5%	1/16	C	HIC	B	12	1005
R209	10K	5%	1/16	C	HIC	B	12	1005
R211	10K	5%	1/16	C	HIC	A	12	1005
R212	390	5%	1/16	C	HIC	A	17	1005
R213	10K	5%	1/16	C	HIC	A	12	1005
R214	390	5%	1/16	C	HIC	A	17	1005
R215	100	5%	1/16	C	HIC	B	8	1005
R216	100	5%	1/10	C	M	B	35	1608
R217	10K	5%	1/16	C	HIC	A	12	1005
R218	1K	5%	1/10	C	M	B	38	1608
R223	10K	5%	1/16	C	HIC	A	12	1005
R224	390	5%	1/16	C	HIC	A	17	1005
R225	5.1K	5%	1/16	C	HIC	B	16	1005
R226	10K	5%	1/16	C	HIC	A	12	1005
R227	10K	5%	1/16	C	HIC	A	12	1005
R228	390	5%	1/16	C	HIC	A	17	1005
R229				C	HIC	A		1005
R230	330	5%	1/16	C	HIC	A	48	1005
R234	100	5%	1/16	C	HIC	B	8	1005
R236	2.2K	5%	1/16	C	HIC	B	18	1005
R237	2.2K	5%	1/16	C	HIC	A	18	1005
R238	1K	5%	1/16	C	HIC	A	21	1005
R239	100	5%	1/16	C	HIC	B	8	1005
R240	100	5%	1/16	C	HIC	B	8	1005
R241	100	5%	1/16	C	HIC	B	8	1005
R242	160	5%	1/16	C	HIC	A	24	1005
R243	100	5%	1/16	C	HIC	B	8	1005
R244	3.32K	1%	1/16	C	HIC	A	25	1005
R247	100	5%	1/16	C	HIC	A	8	1005
R248	10K	5%	1/16	C	HIC	B	12	1005
R249	3.9K	5%	1/16	C	HIC	A	26	1005
R251	7.15K	1%	1/16	C	HIC	A	27	1005
R252	10K	1%	1/16	C	HIC	A	13	1005
R253	10K	1%	1/16	C	HIC	B	13	1005
R254	10K	1%	1/16	C	HIC	A	13	1005
R255	2K	5%	1/16	C	HIC	A	20	1005
R256	10K	5%	1/16	C	HIC	A	12	1005
R257	3K	5%	1/16	C	HIC	A	28	1005
R258	2.2K	1%	1/16	C	HIC	A	29	1005
R259	1K	5%	1/16	C	HIC	B	21	1005
R260	510	5%	1/16	C	HIC	B	7	1005
R265	100	5%	1/16	C	HIC	B	8	1005
R271	5.1K	5%	1/16	C	HIC	A	16	1005
R272	5.1K	5%	1/16	C	HIC	A	16	1005
R273	390	5%	1/16	C	HIC	A	17	1005
R274	390	5%	1/16	C	HIC	A	17	1005
R275	100	5%	1/16	C	HIC	A	8	1005
R276	100	5%	1/16	C	HIC	A	8	1005
R277	100	5%	1/16	C	HIC	A	8	1005
R278	100	5%	1/16	C	HIC	A	8	1005
R281	510K	5%	1/16	C	HIC	B	40	1005
R282	1K	5%	1/16	C	HIC	B	21	1005
R288				C	HIC	A		1005
R289				C	HIC	A		1005
R290	24	5%	1/16	C	HIC	A	35	1005
R291	5.11K	1%	1/16	C	HIC	A	36	1005
R292	5.11K	1%	1/16	C	HIC	A	36	1005
R293	5.11K	1%	1/16	C	HIC	A	36	1005
R294	5.11K	1%	1/16	C	HIC	A	36	1005
R295	Chip JUMPER	5%	1/16	C	HIC	A	38	1005
R296	Chip JUMPER	5%	1/16	C	HIC	A	38	1005
R297	8.45K	1%	1/16	C	HIC	A	51	1005
R298	24	5%	1/16	C	HIC	A	35	1005
R299	10K	1%	1/16	C	HIC	A	13	1005
R300	5.1K	5%	1/10	C	M	B	40	1608
R301	3.74K	0.5%	1/16	C	HIC	B	42	1005
R302	3.01K	0.5%	1/16	C	HIC	B	43	1005
R303	3.01K	0.5%	1/16	C	HIC	B	43	1005
R304				C	HIC	B		1005
R305	10K	5%	1/16	C	HIC	A	12	1005
R306	10K	5%	1/10	C	M	B	42	1608
R307	1K	5%	1/10	C	M	B	38	1608
R309	10K	5%	1/10	C	M	B	42	1608
R321	1.8K	1%	1/16	C	HIC	A	44	1005
R322	1.8K	1%	1/16	C	HIC	A	44	1005
R323	3.9K	5%	1/16	C	HIC	B	26	1005
R324	3K	5%	1/16	C	HIC	B	28	1005
R325	10K	5%	1/16	C	HIC	B	12	1005
R326	Chip JUMPER	5%	1/16	C	HIC	A	38	1005
R350	10K	5%	1/16	C	HIC	A	12	1005
R351	10K	5%	1/16	C	HIC	A	12	1005
R352	10K	5%	1/16	C	HIC	A	12	1005
R353	10K	5%	1/16	C	HIC	A	12	1005
R354	10K	5%	1/16	C	HIC	A	12	1005
R355	10K	5%	1/16	C	HIC	A	12	1005
R356	10K	5%	1/16	C	HIC	A	12	1005
R357	10K	5%	1/16	C	HIC	A	12	1005
R358	10K	5%	1/16	C	HIC	A	12	1005
R359	10K	5%	1/16	C	HIC	A	12	1005
R360	10K	5%	1/16	C	HIC	A	12	1005
R361	10K	5%	1/16	C	HIC	A	12	1005
R362	10K	5%	1/16	C	HIC	B	12	1005
R363	10K	5%	1/16	C	HIC	A	12	1005
R364	10K	5%	1/16	C	HIC	B	12	1005
R365	10K	5%	1/16	C	HIC	B	12	1005
R366	10K	5%	1/16	C	HIC	A	12	1005
R367	10K	5%	1/16	C	HIC	A	12	1005
R368	10K	5%	1/16	C	HIC	B	12	1005
R369	10K	5%	1/16	C	HIC	B	12	1005
R370	~~10K~~	5%	1/16	C	HIC	B	~~12~~	1005
R371	10K	5%	1/16	C	HIC	B	12	1005
R372	10K	5%	1/16	C	HIC	B	12	1005
R373	10K	5%	1/16	C	HIC	A	12	1005
R374	1K	5%	1/16	C	HIC	A	21	1005
R375	10K	5%	1/16	C	HIC	A	12	1005
R401	1K	5%	1/16	C	HIC	B	21	1005
R402	1K	5%	1/16	C	HIC	B	21	1005
R403	1K	5%	1/16	C	HIC	B	21	1005
R404	1K	5%	1/16	C	HIC	B	21	1005

Resistance

Symbol	Resistance(Ω)	Tolerance	Power (W)	Mounting forming	Mounting board	Mounting surface	Part No. Assembly	Remarks
R411	7.5K	5%	1/8	C	M	B	41	2012
R412	7.5K	5%	1/8	C	M	B	41	2012
R418	JUMPER			A	M			
R421	47K	5%	1/10	C	M	B	44	1608
R422	47K	5%	1/10	C	M	B	44	1608
R423	47K	5%	1/10	C	M	B	44	1608
R424	47K	5%	1/10	C	M	B	44	1608
R522	10K	5%	1/16	C	HIC	B	12	1005
R523	10K	5%	1/16	C	HIC	B	12	1005
R524	10K	5%	1/16	C	HIC	B	12	1005
R525	430	5%	1/16	C	HIC	B	45	1005
R526	430	5%	1/16	C	HIC	B	45	1005
R527	430	5%	1/16	C	HIC	B	45	1005
R528	430	5%	1/16	C	HIC	A	45	1005
R529	430	5%	1/16	C	HIC	A	45	1005
R530	430	5%	1/16	C	HIC	A	45	1005
R531	~~Chip JUMPER~~	5%	1/16	C	HIC	B	~~38~~	1005
R532	~~Chip JUMPER~~	5%	1/16	C	HIC	B	~~38~~	1005
R533	~~Chip JUMPER~~	5%	1/16	C	HIC	B	~~38~~	1005
R601	20	5%	1/6	A	M		33	
R602	20	5%	1/6	A	M		33	
R603	20K	5%	1/10	C	M	B	43	1608
R604	510	5%	1/6	A	M		37	
R605	24	5%	1/8	C	M	B	34	2012
R608	360K	1%	1/4	A	M		13	
R609	360K	1%	1/4	A	M		13	
R611	100	5%	1/10	C	M	B	35	1608
R612	5.1K	5%	1/10	C	M	B	40	1608
R613	10K	5%	1/10	C	M	B	42	1608
R650	10K	5%	1/16	C	HIC	A	12	1005
R651	10K	5%	1/16	C	HIC	A	12	1005
R701	1.5K	5%	1/16	C	HIC	B	41	1005
R702	1.5K	5%	1/16	C	HIC	B	41	1005
R703	1.5K	5%	1/16	C	HIC	B	41	1005
R704	1.5K	5%	1/16	C	HIC	B	41	1005
R705	1.5K	5%	1/16	C	HIC	B	41	1005
R706	1.5K	5%	1/16	C	HIC	B	41	1005
R707	20K	5%	1/16	C	HIC	B	19	1005
R708	20K	5%	1/16	C	HIC	B	19	1005
R709	20K	5%	1/16	C	HIC	B	19	1005
R710	20K	5%	1/16	C	HIC	B	19	1005
R711	20K	5%	1/16	C	HIC	B	19	1005
R712	20K	5%	1/16	C	HIC	B	19	1005
R713	10	5%	1/4	C	HIC	B	49	3216
R714	10	5%	1/4	C	HIC	B	49	3216
R715	10	5%	1/4	C	HIC	B	49	3216
R716	1M	5%	1/10	C	HIC	B	50	1608
R717	1K	5%	1/16	C	HIC	A	21	1005
R718	Chip JUMPER	5%	1/16	C	HIC	B	38	1005
R719	Chip JUMPER	5%	1/16	C	HIC	A	38	1005
R721	2K	5%	1/16	C	HIC	A	20	1005
R722	2K	5%	1/16	C	HIC	A	20	1005
R723	2K	5%	1/16	C	HIC	A	20	1005
R724	2K	5%	1/16	C	HIC	A	20	1005
R725	2K	5%	1/16	C	HIC	A	20	1005
R726	2K	5%	1/16	C	HIC	A	20	1005
R727	100	5%	1/16	C	HIC	A	8	1005
R728	100	5%	1/16	C	HIC	A	8	1005
R729	100	5%	1/16	C	HIC	A	8	1005
R730	100	5%	1/16	C	HIC	A	8	1005
R731	100	5%	1/16	C	HIC	A	8	1005
R732	100	5%	1/16	C	HIC	A	8	1005
R741	0.24	2%	1	R	M		8	
R742	JUMPER			A	M			
R751	430K	1%	1/2	A	M		16	
R752	430K	1%	1/2	A	M		16	
R753	430K	1%	1/2	A	M		16	
R754	11K	1%	1/16	C	HIC	B	30	1005
R758				C	HIC	A		1005
R759				C	HIC	A		1005
R760	24	5%	1/16	C	HIC	A	35	1005
R761	5.11K	1%	1/16	C	HIC	A	36	1005
R762	5.11K	1%	1/16	C	HIC	A	36	1005
R763	5.11K	1%	1/16	C	HIC	A	36	1005
R764	5.11K	1%	1/16	C	HIC	A	36	1005
R765	Chip JUMPER	5%	1/16	C	HIC	A	38	1005
R766	Chip JUMPER	5%	1/16	C	HIC	A	38	1005
R767	18.7K	1%	1/16	C	HIC	A	46	1005
R768	24	5%	1/16	C	HIC	A	35	1005
R769	10K	1%	1/16	C	HIC	A	13	1005
R770				C	HIC	A		1005
R781	10K	5%	1/10	C	M	B	42	1608
R782	10K	5%	1/10	C	M	B	42	1608
R783	10K	5%	1/10	C	M	B	42	1608
R784	10K	5%	1/10	C	M	B	42	1608
R785	10K	5%	1/10	C	M	B	42	1608
R786	10K	5%	1/10	C	M	B	42	1608
R787	100	5%	1/10	C	M	B	35	1608
R788	100	5%	1/10	C	M	B	35	1608
R789	100	5%	1/10	C	M	B	35	1608
R790	100	5%	1/10	C	M	B	35	1608
R791	100	5%	1/10	C	M	B	35	1608
R792	100	5%	1/10	C	M	B	35	1608
R801	680	5%	1/4	A	M		18	
R802	180	5%	1/6	A	M		36	
R803	820	1%	1/6	A	M		48	
R804	47	5%	1/2	A	M		15	
R805	Chip JUMPER	5%	1/16	C	HIC	A	38	1005
R806	510	5%	1/4	A	M		17	
R905	100	1%	1/6	A	M		47	
R906	3.65K	1%	1/6	A	M		51	
R907	2K	5%	1/6	A	M		39	
R911	10	5%	1/10	C	M	B	31	1608
R912	10	5%	1/10	C	M	B	31	1608
R913	10	5%	1/10	C	M	B	31	1608
R914	10	5%	1/10	C	M	B	31	1608
R915	10	5%	1/10	C	M	B	31	1608
R916	10	5%	1/10	C	M	B	31	1608
R917	5.1K	5%	1/10	C	M	B	40	1608
R990	100	5%	1/16	C	HIC	A	8	1005
R991	100	5%	1/16	C	HIC	A	8	1005
R992	100	5%	1/16	C	HIC	A	8	1005

Jumper

Symbol	Exist/No	Mounting forming	Mounting board	Mounting surface	Part No. Assembly	Remarks
JP1	No	~~C~~	HIC	~~A~~		1005
JP2	No	~~C~~	HIC	~~A~~		1005
JP3	Exist	C	HIC	A	38	1005
JP4	Exist	C	HIC	A	38	1005
JP5	No	C	HIC	A		1005
JW001	Exist	A	M			
JW002	Exist	A	M			
JW302	No	~~A~~	M			
JP01	No	~~A~~	M			
JP02	No	~~A~~	M			

Capacitor

Symbol	Capacity (μF)	Voltage (V)	Assortment	Mounting forming	Mounting board	Mounting surface	Assembly Part No.	Remarks
C001	0.01	AC250	C	R	M		57	Murata KH
C002	0.01	AC250	C	R	M		57	Murata KH
C003	0.68	AC310	F	H	M		70	OKAYA LE-MX
C004	0.01	AC250	C	R	M		57	Murata KH
C005	0.01	AC250	C	R	M		57	Murata KH
C009	0.1	50	C	A	M		80	FM
C010	100	50	D	R	M		62	NICHICON VR
C011	3.3	AC310	F	H	M		71	OKAYA LE-MX
C012			~~C~~	~~R~~	M			
C013	0.01	AC250	C	R	M		57	Murata KH
C014	0.01	AC250	C	R	M		57	Murata KH
C015	~~4700p~~	~~AC250~~	C	R	M		~~60~~	Murata KH
C016	~~4700p~~	~~AC250~~	C	R	M		~~60~~	Murata KH
C017	~~4700p~~	~~AC250~~	C	R	M		~~60~~	Murata KH
C018	~~4700p~~	~~AC250~~	C	R	M		~~60~~	Murata KH
C021	375	420	D	H	M		58	
C022	375	420	D	H	M		58	
C023	68	450	D	H	M		73	KMX [illegible]
C032	0.1	450	F	H	M		72	OKAYA APP
C102	2200p	1k	C	P	M		53	TDK [illegible]
C103	220p	2k	C	P	M		52	
C104	100	50	D	R	M		55	KMG
C105	0.1	50	C	C	M	B	81	1608
C106	1	50	C	A	M		63	
C107	22	25	D	R	M		66	KMG
C108	0.047	50	C	A	M		67	
C109	15p	50	C	A	M		68	
C110		AC250V	C	R	M			
C111	470	25	D	R	M		74	
C113			C	R	M			
C114	470	25	D	R	M		74	
C115	470p	50	C	A	M		77	
C116	470	25	D	R	M		75	
C117	0.1	50	C	C	M	B	81	1608
C118	330	16	D	R	M		78	
C119			C	R	M			
C120	330p	50	C	A	M		79	
C121	100	25	D	R	M		88	
C122		25	D	R	M			
C123	100	10	D	R	M		89	
C124	0.1	50	C	C	M	B	81	1608
C125	0.1	50	C	C	M	B	81	1608
C126	0.1	50	C	C	M	B	81	1608
C127	0.1	50	C	C	M	B	81	1608
C128	0.1	16	C	C	HIC	B	55	1005
C129	0.1	25	C	C	HIC	B	59	1608
C130	0.1	25	C	C	HIC	B	59	1608
C131			C	A	M			
C132	~~0.1~~	~~50~~	C	C	M	B	~~90~~	1608
C191	0.1	25	C	C	HIC	B	63	1608
C201	0.1	16	C	C	HIC	A	55	1005
C202	0.1	16	C	C	HIC	A	55	1005
C203			~~C~~	~~C~~	HIC	~~A~~		1005
C204	470p	50	C	C	HIC	A	60	1005
C205	0.047	25	C	C	HIC	B	54	1005
C206	470p	50	C	C	HIC	B	60	1005
C207	470p	50	C	C	HIC	A	60	1005
C209	0.1	16	C	C	HIC	A	55	1005
C210	0.1	16	C	C	HIC	B	55	1005
C211	0.047	25	C	C	HIC	B	54	1005
C215			C	C	HIC	A		1005
C216	0.1	16	C	C	HIC	A	55	1005
C217	0.1	16	C	C	HIC	A	55	1005
C220	0.01	25	C	C	HIC	B	70	1005
C222			~~C~~	~~C~~	HIC	~~A~~		1005
C223	1000p	50	C	C	HIC	B	68	1005
C224	0.1	16	C	C	HIC	B	55	1005
C231	0.1	16	C	C	HIC	B	55	1005
C234	0.1	16	C	C	HIC	B	55	1005
C235	0.1	16	C	C	HIC	B	55	1005
C236	0.1	16	C	C	HIC	B	55	1005
C237	0.1	16	C	C	HIC	B	55	1005
C238	0.1	16	C	C	HIC	B	55	1005
C239	0.1	16	C	C	HIC	B	55	1005
C240	0.1	16	C	C	HIC	B	55	1005
C241	0.1	16	C	C	HIC	B	55	1005
C251	2200p	50	C	C	HIC	B	61	1608
C252	0.068	25	C	C	HIC	A	62	1608
C271	0.1	16	C	C	HIC	A	55	1005
C272	100p	50	C	A	M		82	
C273	100p	50	C	A	M		82	
C281	0.1	16	C	C	HIC	A	55	1005
C282	0.1	16	C	C	HIC	A	55	1005
C283	0.22	16	C	C	HIC	B	57	1608
C285	0.1	16	C	C	HIC	B	55	1005
C291	0.1	25	C	C	HIC	A	59	1608
C292	0.047	25	C	C	HIC	A	54	1005
C294			~~C~~	~~C~~	HIC	~~A~~		1005
C321	0.033	50	C	C	HIC	A	65	1608
C324	100p	50	C	C	HIC	B	76	1005
C401	100	25	D	R	M		64	NICHICON VR
C504	100p	50	C	C	HIC	B	76	1005
C505	100p	50	C	C	HIC	B	76	1005
C506	100p	50	C	C	HIC	B	76	1005
C508	0.1	16	C	C	HIC	B	55	1005
C509	220p	50	C	C	HIC	B	67	1005
C601		50	C	A	M			
C602	0.022	50	C	A	M		86	
C603	2200p	50	C	A	M		85	
C604	0.01	DC1kV	C	R	M		54	
C605	4700p	DC1kV	C	R	M		59	
C652		50	~~C~~	~~C~~	HIC	A		1005
C702	0.33	25	C	C	HIC	B	74	2125
C703	2200p	50	C	C	HIC	B	75	1005
C704	1000p	50	C	C	HIC	A	68	1005
C706	0.1	16	C	C	HIC	B	55	1005
C711	100p	50	C	C	HIC	A	73	1608
C712	100p	50	C	C	HIC	A	73	1608
C713	100p	50	C	C	HIC	A	73	1608
C714	100p	50	C	C	HIC	A	73	1608
C715	100p	50	C	C	HIC	A	73	1608
C716	100p	50	C	C	HIC	A	73	1608
C717			~~C~~	~~C~~	HIC	B		2125
C718			~~C~~	~~C~~	HIC	B		1608
C721	10	25	D	C	HIC	A	72	WR
C722	10	25	D	C	HIC	A	72	WR
C723	10	25	D	C	HIC	A	72	WR
C724	0.1	25	C	C	HIC	A	63	1608
C725	0.1	25	C	C	HIC	A	63	1608
C726	0.1	25	C	C	HIC	A	63	1608

Oscillator

Symbol	Type	Mounting forming	Mounting board	Mounting surface	Assembly Part No.	Remarks
X1	CSTCE12M5G	C	HIC	A	96	12.5MHz

Capacitor

Symbol	Capacity (μF)	Voltage (V)	Assortment	Mounting forming	Mounting board	Mounting surface	Assembly Part No.	Remarks
C731	220p	50	C	C	M	B	87	CH 1608
C732	220p	50	C	C	M	B	87	CH 1608
C733	220p	50	C	C	M	B	87	CH 1608
C734	220p	50	C	C	M	B	87	CH 1608
C735	220p	50	C	C	M	B	87	CH 1608
C736	220p	50	C	C	M	B	87	CH 1608
C737	100p	50	C	C	HIC	B	73	1608
C738	100p	50	C	C	HIC	B	73	1608
C739	100p	50	C	C	HIC	B	73	1608
C740	100p	50	C	C	HIC	A	73	1608
C741	100p	50	C	C	HIC	A	73	1608
C742	100p	50	C	C	HIC	A	73	1608
C751	0.01	DC1kV	C	R	M		54	
C752			~~C~~	~~R~~	M			
C762	0.01	25	C	C	HIC	A	70	1005
C764			~~C~~	~~C~~	HIC	A		1005
C772	0.1	50	C	C	M	B	81	FM 1608
C801	0.022	50	C	C	HIC	A	69	1608
C802	4700p	AC250	C	R	M		56	
C803	0.022	50	F	R	M		76	
C804	0.1	AC310	F	H	M		69	OKAYA LE-MX
C805	0.1	50	C	C	M	B	81	FM 1608
C806	0.022	50	C	C	HIC	A	69	1608
C807	0.1	50	C	C	M	B	81	FM 1608
C808	47p	50	C	C	HIC	A	66	CH 1005
C900	0.1	50	C	C	M	B	81	FM 1608
C901	680p	50	C	C	M	B	84	CH 1608
C902	680p	50	C	C	M	B	84	CH 1608
C903	680p	50	C	C	M	B	84	CH 1608
C904	680p	50	C	C	M	B	84	CH 1608
C905	680p	50	C	C	M	B	84	CH 1608
C906	680p	50	C	C	M	B	84	CH 1608
C913	33	25	D	R	M		61	[illegible]
C914	33	25	D	R	M		61	[illegible]
C915	33	25	D	R	M		61	[illegible]
C917			C	C	M	B		1608
C919	0.022	50	C	A	M		86	
C920	0.1	50	C	C	M	B	81	FM 1608
C921	0.1	50	C	C	M	B	81	FM 1608
C922	0.1	50	C	C	M	B	81	FM 1608
C923	0.1	50	C	C	M	B	81	FM 1608
C924	0.1	50	C	C	M	B	81	FM 1608
C925	220	25	D	R	M		65	NICHICON RZ
C927	220p	50	C	C	M	B	87	CH 1608
C931	0.1	16	C	C	HIC	B	55	1005
C932	0.1	16	C	C	HIC	A	55	1005
C940	~~0.1~~	~~50~~	~~C~~	~~A~~	M	~~A~~		

Diode

Symbol	Type	Mounting forming	Mounting board	Mounting surface	Assembly Part No.	Remarks
D101	SARS01	A	M		94	
D102	DA2JF23	C	M	B	91	
D103	~~D1NL20U~~	A	M			
D104	~~RB721Q~~	A	M		~~119~~	
D105	RL2Z	H	M		99	
D107	D1NL20U	A	M		92	
D108	EL1Z	A	M		118	
D109	DB2J314	C	M	B	119	
D110	AK04	A	M		120	
D001	~~1SS120-TA~~	A	M			
D002	KDS4148U	C	M	B	93	
D201	KDS181-RTK/P	C	HIC	B	79	
D202	KDS181-RTK/P	C	HIC	B	79	
D251	KDS184-RTK/P	C	HIC	A	82	
D271	KDS184-RTK/P	C	HIC	B	82	
D272	KDS181-RTK/P	C	HIC	B	79	
D273	1SS352TPH3F	C	HIC	B	85	
D291	KDS226-RTK/P	C	HIC	A	83	
D310	KDS226-RTK/P	C	HIC	B	83	
D321	KDS184-RTK/P	C	HIC	B	82	
D322	KDS181-RTK/P	C	HIC	A	79	
D601	D30L60	H	M		97	[illegible]
D701		~~C~~	HIC	~~B~~		
D702		~~C~~	HIC	~~B~~		
D703		~~C~~	HIC	~~B~~		
D704		~~C~~	HIC	~~B~~		
D705		~~C~~	HIC	~~B~~		
D706		~~C~~	HIC	~~B~~		
D711	D1FK60	C	HIC	A	84	
D712	D1FK60	C	HIC	A	84	
D713	D1FK60	C	HIC	A	84	
D721	1SS355VM	C	HIC	B	80	
D722	1SS355VM	C	HIC	B	80	
D723	1SS355VM	C	HIC	B	80	
D724	1SS355VM	C	HIC	A	80	
D725	1SS355VM	C	HIC	A	80	
D726	1SS355VM	C	HIC	A	80	
D731	1SS355VM	C	HIC	B	80	
D732	1SS355VM	C	HIC	B	80	
D733	1SS355VM	C	HIC	B	80	
D735	1SS355VM	C	HIC	B	80	
D761	KDS226-RTK/P	C	HIC	A	83	
D801	KDS226-RTK/P	C	HIC	A	83	
D802	KDS226-RTK/P	C	HIC	A	83	
DB1	D2SB60A	H	M		95	
DB601	LN25XB60	H	M		96	

Zener diode

Symbol	Type	Mounting forming	Mounting board	Mounting surface	Assembly Part No.	Remarks
ZD101	HZS5AI	A	M		100	
ZD102		C	M	B		
ZD701		~~C~~	HIC	~~A~~		
ZD702		~~C~~	HIC	~~B~~		
ZD703		~~C~~	HIC	~~B~~		
ZD704	TFZ-22B	C	M	B	101	
ZD901	TFZ-22B	C	M	B	101	
ZD902	TFZ-22B	C	M	B	101	
ZD903		C	M	B		
ZD911		C	M	B		
ZD912		C	M	B		
ZD913		C	M	B		

LED

Symbol	Type	Mounting forming	Mounting board	Assembly Part No.	Remarks
LD301	SLR-342VCTB7	R	M	98	RED

Switch

Symbol	Type	Mounting forming	Mounting board	Assembly Part No.	Remarks
SW	EVQPAE07K	H	M	136	

IC

Symbol	Type	Mounting forming	Mounting board	Mounting surface	Assembly Part No.	Remarks
IC1	MIP4140S	H	M		106	
IC2	TD62003AFG	S	HIC	B	101	
IC3	NJM2742M	S	HIC	A	102	
IC4	NJM2392D	H	M		105	
IC5	NJM2903E	S	HIC	A	105	
IC8	74AHC08PW	S	HIC	B	106	
IC10	R3112N421C-TR	S	HIC	B	100	
IC11	TD62003AP	H	M		107	
IC702	6ED003L06	S	HIC	A	103	
E²PROM	S-24C32CI-T8T1U3	S	HIC	A	99	
REG2	KIA431-A-AT/PC	R	M		108	
MICON	RX62T	S	HIC	A	97	
IPM	PS219B4-CS(15A)	H	M		109	

Transistor

Symbol	Type	Mounting forming	Mounting board	Mounting surface	Assembly Part No.	Remarks
Q102	DTC123YK	C	M	B	110	
Q105	RRR040P03TL	C	M	B	121	
Q121	SSM3J314T	C	HIC	A	92	
Q122	RN1115TE85L	C	HIC	A	93	
Q202	KTC3875SGR	C	HIC	B	88	
Q203	DTC143EEBTL	C	HIC	B	90	
Q251	KTC3875SGR	C	HIC	A	88	
Q273	RN1102TE	C	HIC	B	91	
Q601	STGX30NC60S	H	M		111	
Q611	KTC200-Y-AT/P	R	M		112	
Q612	KTA200-Y-AT/P	R	M		113	
Q613	KRC105-AT	R	M		114	
Q701	DTC114EEBTL	C	HIC	A	89	
Q702	DTC114EEBTL	C	HIC	A	89	
Q703	DTC114EEBTL	C	HIC	A	89	
Q711	P5F50NP2F	H	M		115	
Q712	P5F50NP2F	H	M		115	
Q713	P5F50NP2F	H	M		115	
Q714	P5F50NP2F	H	M		115	
Q715	P5F50NP2F	H	M		115	
Q716	P5F50NP2F	H	M		115	

Inductor

Symbol	Type	Mounting forming	Mounting board	Mounting surface	Assembly Part No.	Remarks
L001	JUMPER	A	M			
L002	JUMPER	A	M			
L003	~~JUMPER~~	~~A~~	M			
L003A	NLCV32T4R7	C	M	B	131	3225
L101	JUMPER	A	M			
L102	RCH108NP-331K	H	M		132	[illegible]
L103	JUMPER	A	M			
L104	JUMPER	A	M			
L105	JUMPER	A	M			
L701	JUMPER	A	M			
L801	IF-TRANS	H	M		127	
T101	RRMF4331	H	M		125	
CT1	S19-J299CT	H	M		126	
NF1	RRMH3835	H	M		129	
NF2	RRMH3900	H	M		130	

Surge absorbers

Symbol	Type	Mounting forming	Mounting board	Assembly Part No.	Remarks
VS1	ERZVA9V431	R	M	137	
VS2	ERZVA9V431	R	M	137	
VS3	ERZVA5V471	R	M	138	
VS4	ERZVA9V431	R	M	137	
VS5	ERZVA9V431	R	M	137	
VS8	450NR-12D	R	M	135	
VS9	~~450NR-12D~~	R	M		
SA	DE37-102MF	R	M	139	
SK1	RE1201-C	H	M	140	

Photo coupler

Symbol	Type	Mounting forming	Mounting board	Mounting surface	Assembly Part No.	Remarks
PQ101	PS2501A-1	H	M	A	116	
PQ401	PS2861B	C	M	B	117	
PQ402	PS2861B	C	M	B	117	
PQ403	PS2861B	C	M	B	117	
PQ404	PS2861B	C	M	B	117	

Relay

Symbol	Type	Mounting forming	Mounting board	Assembly Part No.	Remarks
RL1	G4A-1A-PE	H	M	102	
RL2	ALD112B01	H	M	103	
RL3	ALD112B01	H	M	103	

Fuse

Symbol	Type	Mounting forming	Mounting board	Assembly Part No.	Remarks
F1	15A	H	M	142	HOLDER TYPE
F2	FCU250V15A0H17	H	M	143	LEAD TYPE
F3	3A-FUSE-WE	H	M	144	LEAD TYPE
F4	2A-FUSE-WE	H	M	145	LEAD TYPE
F5	3.15A-FUSE	H	M	146	HOLDER TYPE
F6	3.15A-FUSE	H	M	146	HOLDER TYPE

Fuse Clip

Symbol	Type	Mounting forming	Mounting board	Assembly Part No.	Remarks
–	RRPM1075	H	M	141	F1 φ6.4X31.8mm
–	RRPM3094	R	M	147	F5,F6 φ5.2X20mm

Connector

Symbol	Type	Mounting forming	Mounting board	Assembly Part No.	Remarks
CN2	VH 2P(/4)	H	M	148	
CN8	XA 2P	H	M	149	
CN9	XA 2P	H	M	150	
CN10	XA 2P	H	M	151	
CN15	XA 6P	H	M	152	
CN17	PH 4P	H	M	153	
CN18	PH 11P	H	M	155	
CN20	PH 8P	H	M	154	
CN24	VH 3P(/5)	H	M	156	
CN25	~~XA 4P~~	H	M		
CN30	~~VH 2P~~	H	M		

MODEL RAC-50WEC
RAC-20WECI

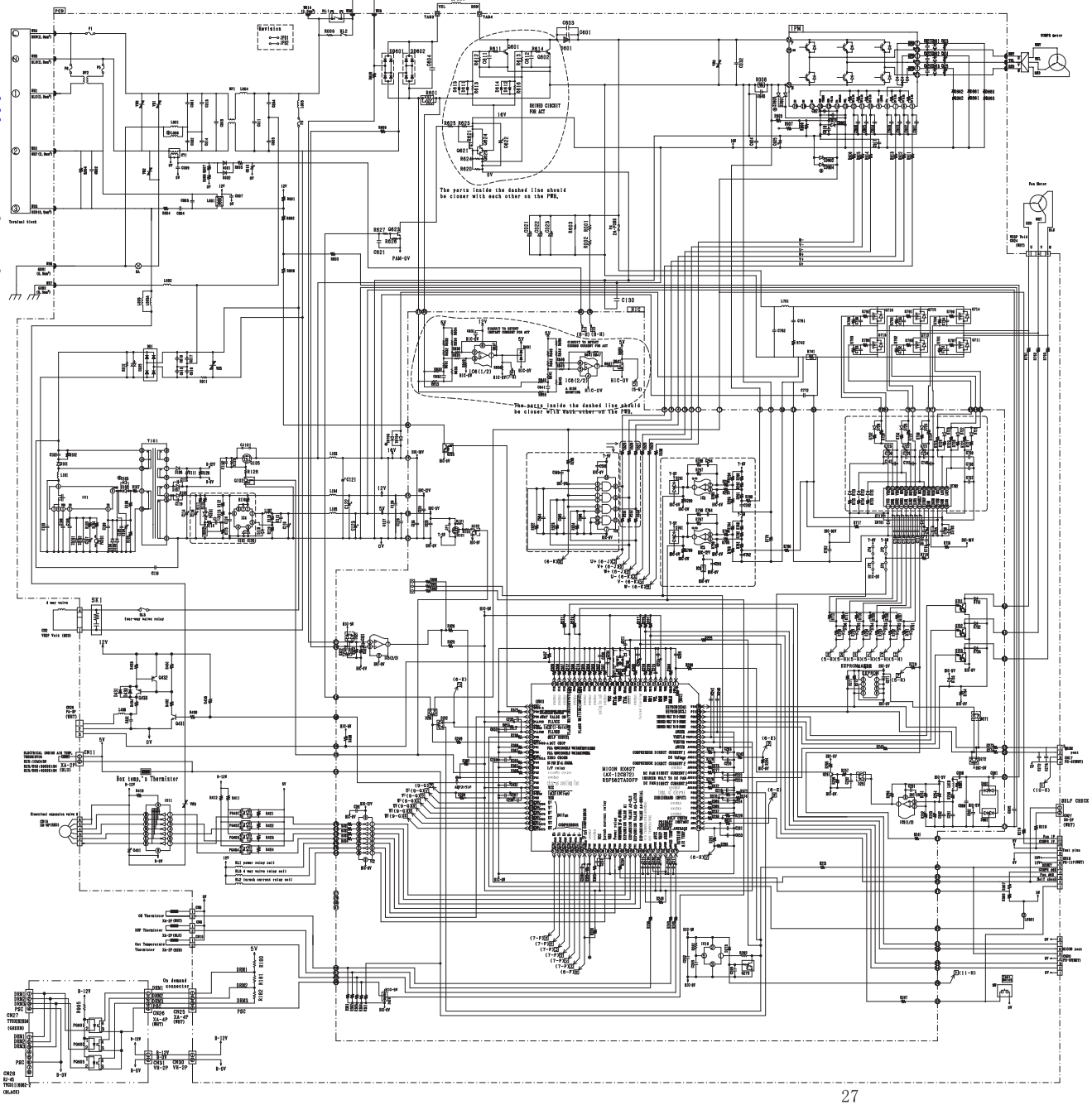

The parts inside the dashed line should be closer with each other on the PWB.

Mounting PCB
M: Main PCB(#MBOARD-AS)

Way of mount mark
A: Axial inserter
R: Radial inserter
R: Radial inserter(7.5mm pitch)
H: Hand insertion
C: Chip

Resistance

Symbol	Resistance(Ω)	Tolerance	Power(W)	Mounting-forming	Mounting-board	Mounting-surface	Assembly Part No.	Remarks
R001	180K	0.5%	1/2	A	M		14	
R002	180K	0.5%	1/2	A	M		14	
R004	470K	5%	1/4	A	M		24	
R005	1.96K	1%	1/6	A	M		50	
R006	1K	1%	1/6	A	M		49	
R007	20	1%	1/6	A	M		46	
R008	25m	5%	10	H	M		7	
R009	100	5%	10	H	M		6	
R011	2.2	5%	5	H	M		9	
R012	~~1M~~	5%	1/4	A	M		/	
R102	100K	5%	2	R	M		10	SPR
R103	1K	5%	1/6	A	M		38	
R104	1.8K	5%	1/6	A	M		19	
R105	47K	5%	1/6	A	M		20	
R106	68K	5%	1/6	A	M		21	
R107	JUMPER			A	M			
R110	1K	5%	1/6	A	M		38	
R111	2.2K	5%	1/6	A	M		22	
R112	33K	1%	1/6	A	M		23	
R113	5.1K	1%	1/6	A	M		25	
R114	470	5%	1/2	A	M		26	
R115	10K	1%	1/6	A	M		27	
R116	0.62	2%	1/4	A	M		28	
R118	8.2K	0.5%	1/6	A	M		29	
R119	2.7K	0.5%	1/6	A	M		30	
R120	20K	5%	1/6	A	M		12	
R121	10K	5%	1/16	C	HIC	B	12	1005
R122	5.1K	5%	1/16	C	HIC	B	16	1005
R125	100K	5%	1/10	C	M	B	62	1608
R126	100K	5%	1/10	C	M	B	62	1608
R180	/	5%	1/10	C	M	B	/	1608
R181	/	5%	1/10	C	M	B	/	1608
R182	/	5%	1/10	C	M	B	/	1608
R200	10K	1%	1/16	C	HIC	A	13	1005
R201	510	5%	1/16	C	HIC	A	7	1005
R203	100	5%	1/16	C	HIC	B	8	1005
R206	5.1K	5%	1/16	C	HIC	B	16	1005
R208	10K	5%	1/16	C	HIC	B	12	1005
R209	10K	5%	1/16	C	HIC	B	12	1005
R211	10K	5%	1/16	C	HIC	A	12	1005
R212	390	5%	1/16	C	HIC	A	17	1005
R213	10K	5%	1/16	C	HIC	A	12	1005
R214	390	5%	1/16	C	HIC	A	17	1005
R215	100	5%	1/16	C	HIC	B	8	1005
R216	100	5%	1/6	A	M		54	
R217	10K	5%	1/16	C	HIC	A	12	1005
R218	1K	5%	1/6	A	M		38	
R223	10K	5%	1/16	C	HIC	A	12	1005
R224	390	5%	1/16	C	HIC	A	17	1005
R225	5.1K	5%	1/16	C	HIC	B	16	1005
R226	10K	5%	1/16	C	HIC	B	12	1005
R227	10K	5%	1/16	C	HIC	A	12	1005
R228	390	5%	1/16	C	HIC	A	17	1005
R229	/	/	/	C	HIC	A	/	1005
R230	330	5%	1/16	C	HIC	A	48	1005
R234	100	5%	1/16	C	HIC	B	8	1005
R236	2.2K	5%	1/16	C	HIC	B	18	1005
R237	2.2K	5%	1/16	C	HIC	B	18	1005
R238	1K	5%	1/16	C	HIC	B	21	1005
R239	100	5%	1/16	C	HIC	B	8	1005
R240	100	5%	1/16	C	HIC	B	8	1005
R241	100	5%	1/16	C	HIC	B	8	1005
R242	160	5%	1/16	C	HIC	B	24	1005
R243	100	5%	1/16	C	HIC	B	8	1005
R244	3.32K	1%	1/16	C	HIC	B	25	1005
R247	100	5%	1/16	C	HIC	A	8	1005
R248	10K	5%	1/16	C	HIC	A	12	1005
R249	2.2K ~~3.9K~~	5%	1/16	C	HIC	A	18 ~~20~~	1005
R251	7.15K	1%	1/16	C	HIC	A	27	1005
R252	10K	1%	1/16	C	HIC	A	13	1005
R253	10K	1%	1/16	C	HIC	A	13	1005
R254	10K	1%	1/16	C	HIC	A	13	1005
R255	2K	5%	1/16	C	HIC	B	20	1005
R256	10K	5%	1/16	C	HIC	B	12	1005
R257	3K	5%	1/16	C	HIC	B	28	1005
R258	2.2K	1%	1/16	C	HIC	B	29	1005
R259	1K	5%	1/16	C	HIC	A	21	1005
R260	510	5%	1/16	C	HIC	B	7	1005
R265	100	5%	1/16	C	HIC	B	8	1005
R271	5.1K	5%	1/16	C	HIC	A	16	1005
R272	5.1K	5%	1/16	C	HIC	A	16	1005
R273	390	5%	1/16	C	HIC	A	17	1005
R274	390	5%	1/16	C	HIC	A	17	1005
R275	100	5%	1/16	C	HIC	A	8	1005
R276	100	5%	1/16	C	HIC	A	8	1005
R277	100	5%	1/16	C	HIC	A	8	1005
R278	100	5%	1/16	C	HIC	A	8	1005
R281	510K	5%	1/16	C	HIC	B	40	1005
R282	1K	5%	1/16	C	HIC	B	21	1005
R288	/	/	/	C	HIC	A	/	1005
R289	/	/	/	C	HIC	A	/	1005
R290	24	5%	1/16	C	HIC	A	35	1005
R291	5.11K	1%	1/16	C	HIC	A	36	1005
R292	5.11K	1%	1/16	C	HIC	A	36	1005
R293	5.11K	1%	1/16	C	HIC	A	36	1005
R294	5.11K	1%	1/16	C	HIC	A	36	1005
R295	Chip JUMPER	5%	1/16	C	HIC	A	38	1005
R296	Chip JUMPER	5%	1/16	C	HIC	A	38	1005
R297	8.45K	1%	1/16	C	HIC	A	51	1005
R298	24	5%	1/16	C	HIC	A	35	1005
R299	10K	1%	1/16	C	HIC	A	13	1005
R300	5.1K	5%	1/6	A	M		40	
R301	3.74K	0.5%	1/16	C	HIC	B	42	1005
R302	3.01K	0.5%	1/16	C	HIC	B	43	1005
R303	3.01K	0.5%	1/16	C	HIC	B	43	1005
R304	/	/	/	C	HIC	B	/	1005
R305	10K	5%	1/16	C	HIC	A	12	1005
R307	1K	5%	1/6	A	M		38	
R311	12.7K	1.0%	1/16	C	HIC	B	52	1005
R321	1.8K	1%	1/16	C	HIC	B	44	1005
R322	1.8K	1%	1/16	C	HIC	B	44	1005
R325	10K	5%	1/16	C	HIC	A	12	1005
R326	Chip JUMPER	5%	1/16	C	HIC	A	38	1005
R350	10K	5%	1/16	C	HIC	A	12	1005
R351	10K	5%	1/16	C	HIC	A	12	1005
R352	10K	5%	1/16	C	HIC	A	12	1005
R353	10K	5%	1/16	C	HIC	A	12	1005
R354	10K	5%	1/16	C	HIC	A	12	1005
R355	10K	5%	1/16	C	HIC	A	12	1005
R356	10K	5%	1/16	C	HIC	A	12	1005
R357	10K	5%	1/16	C	HIC	A	12	1005
R358	10K	5%	1/16	C	HIC	A	12	1005
R359	10K	5%	1/16	C	HIC	A	12	1005
R360	10K	5%	1/16	C	HIC	B	12	1005
R361	10K	5%	1/16	C	HIC	A	12	1005
R362	10K	5%	1/16	C	HIC	A	12	1005
R364	10K	5%	1/16	C	HIC	B	12	1005
R365	10K	5%	1/16	C	HIC	B	12	1005
R366	10K	5%	1/16	C	HIC	B	12	1005
R367	10K	5%	1/16	C	HIC	B	12	1005
R368	10K	5%	1/16	C	HIC	B	12	1005
R369	10K	5%	1/16	C	HIC	B	12	1005
R370	~~10K~~	5%	1/16	C	HIC	B	~~12~~	1005

Resistance

Symbol	Resistance(Ω)	Tolerance	Power(W)	Mounting-forming	Mounting-board	Mounting-surface	Assembly Part No.	Remarks
R371	10K	5%	1/16	C	HIC	B	12	1005
R372	10K	5%	1/16	C	HIC	B	12	1005
R373	10K	5%	1/16	C	HIC	A	12	1005
R374	1K	5%	1/16	C	HIC	B	21	1005
R375	10K	5%	1/16	C	HIC	B	12	1005
R401	1K	5%	1/16	C	HIC	B	21	1005
R402	1K	5%	1/16	C	HIC	B	21	1005
R403	1K	5%	1/16	C	HIC	B	21	1005
R404	1K	5%	1/16	C	HIC	B	21	1005
R411	7.5K	5%	1/8	C	M	B	41	2012
R412	7.5K	5%	1/8	C	M	B	41	2012
R418	JUMPER			A	M			
R421	47K	5%	1/10	C	M	B	44	1608
R422	47K	5%	1/10	C	M	B	44	1608
R423	47K	5%	1/10	C	M	B	44	1608
R424	47K	5%	1/10	C	M	B	44	1608
R430	5.1K	5%	1/4	A	M		59	
R431	10K	5%	1/6	A	M		60	
R432	3K	5%	1/4	A	M		58	
R433	4.7	5%	1/4	A	M		53	
R434	JUMPER	5%	1/6	A	M			
R435	15K	5%	1/6	A	M		61	
R436	5.1K	5%	1/16	C	HIC	A	16	1005
R437	10K	5%	1/16	C	HIC	A	12	1005
R522	10K	5%	1/16	C	HIC	B	12	1005
R523	10K	5%	1/16	C	HIC	B	12	1005
R524	10K	5%	1/16	C	HIC	B	12	1005
R525	430	5%	1/16	C	HIC	B	45	1005
R526	430	5%	1/16	C	HIC	B	45	1005
R527	430	5%	1/16	C	HIC	B	45	1005
R528	430	5%	1/16	C	HIC	A	45	1005
R529	430	5%	1/16	C	HIC	A	45	1005
R530	430	5%	1/16	C	HIC	A	45	1005
R531	Chip JUMPER	5%	1/16	C	HIC	B	38	1005
R532	Chip JUMPER	5%	1/16	C	HIC	B	38	1005
R533	Chip JUMPER	5%	1/16	C	HIC	B	38	1005
R601	12.5m	5%	10	H	M		33	
R603	470K	5%	1/2	A	M		11	
R608	360K	1%	1/4	A	M		13	
R609	360K	1%	1/4	A	M		13	
R611	5.1	5%	1/4	A	M		37	
R612	20K	5%	1/6	A	M		12	
R613	75	5%	1/4	A	M		43	
R614	5.1	5%	1/4	A	M		37	
R615	20K	5%	1/6	A	M		12	
R616	75	5%	1/4	A	M		43	
R620	1.5K	5%	1/2	A	M		84	
R621	JUMPER			A	M			
R623	820	5%	1/6	A	M		56	
R624	1.5K	5%	1/2	A	M		84	
R625	1.2K	5%	1/6	A	M		57	
R626	1.2K	5%	1/10	C	M	B	206	1608
R627	330	5%	1/4	A	M		55	
R630	24	5%	1/16	C	HIC	A	35	1005
R631	5.11K	1%	1/16	C	HIC	A	36	1005
R632	5.11K	1%	1/16	C	HIC	A	36	1005
R633	5.11K	1%	1/16	C	HIC	A	36	1005
R634	5.76K	1%	1/16	C	HIC	A	31	1005
R635	24	5%	1/16	C	HIC	A	35	1005
R636	24	5%	1/16	C	HIC	A	35	1005
R637	21.5K	1%	1/16	C	HIC	A	32	1005
R638	24	5%	1/16	C	HIC	A	35	1005
R639	10K	1%	1/16	C	HIC	A	13	1005
R640	24	5%	1/16	C	HIC	A	35	1005
R641	3.3K	1%	1/16	C	HIC	A	33	1005
R642	5.11K	1%	1/16	C	HIC	A	36	1005
R643	5.11K	1%	1/16	C	HIC	A	36	1005
R644	5.11K	1%	1/16	C	HIC	A	36	1005
R645	CHIP JUMPER	5%	1/16	C	HIC	A	38	1005
R646	CHIP JUMPER	5%	1/16	C	HIC	A	38	1005
R647	51K	1%	1/16	C	HIC	A	34	1005
R648	24	5%	1/16	C	HIC	A	35	1005
R649	43.2k	1%	1/16	C	HIC	A	47	1005
R650	5.1K	1%	1/16	C	HIC	A	22	1005
R651	1K	5%	1/16	C	HIC	B	21	1005
R652	510	5%	1/16	C	HIC	A	7	1005
R653	24	5%	1/16	C	HIC	A	35	1005
R654	24	5%	1/16	C	HIC	A	35	1005
R655	24	5%	1/16	C	HIC	A	35	1005
R656	24	5%	1/16	C	HIC	A	35	1005
R657	20K	5%	1/16	C	HIC	A	19	1005
R701	1.5K	5%	1/16	C	HIC	B	41	1005
R702	1.5K	5%	1/16	C	HIC	B	41	1005
R703	1.5K	5%	1/16	C	HIC	B	41	1005
R704	1.5K	5%	1/16	C	HIC	B	41	1005
R705	1.5K	5%	1/16	C	HIC	B	41	1005
R706	1.5K	5%	1/16	C	HIC	B	41	1005
R707	20K	5%	1/16	C	HIC	B	19	1005
R708	20K	5%	1/16	C	HIC	B	19	1005
R709	20K	5%	1/16	C	HIC	B	19	1005
R710	20K	5%	1/16	C	HIC	B	19	1005
R711	20K	5%	1/16	C	HIC	B	19	1005
R712	20K	5%	1/16	C	HIC	B	19	1005
R713	10	5%	1/4	C	HIC	B	49	3216
R714	10	5%	1/4	C	HIC	B	49	3216
R715	10	5%	1/4	C	HIC	B	49	3216
R716	1M	5%	1/10	C	HIC	B	50	1608
R717	1K	5%	1/16	C	HIC	A	21	1005
R718	Chip JUMPER	5%	1/16	C	HIC	B	38	1005
R719	Chip JUMPER	5%	1/16	C	HIC	B	38	1005
R721	2K	5%	1/16	C	HIC	A	20	1005
R722	2K	5%	1/16	C	HIC	A	20	1005
R723	2K	5%	1/16	C	HIC	A	20	1005
R724	2K	5%	1/16	C	HIC	A	20	1005
R725	2K	5%	1/16	C	HIC	A	20	1005
R726	2K	5%	1/16	C	HIC	A	20	1005
R727	100	5%	1/16	C	HIC	A	8	1005
R728	100	5%	1/16	C	HIC	A	8	1005
R729	100	5%	1/16	C	HIC	A	8	1005
R730	100	5%	1/16	C	HIC	A	8	1005
R731	100	5%	1/16	C	HIC	A	8	1005
R732	100	5%	1/16	C	HIC	A	8	1005
R741	0.24	2%	1	R	M		8	
R742	JUMPER			A	M			
R751	430K	1%	1/2	A	M		16	
R752	430K	1%	1/2	A	M		16	
R753	430K	1%	1/2	A	M		16	
R754	11K	1%	1/16	C	HIC	B	30	1005
R758	/	/	/	C	HIC	A	/	1005
R759	/	/	/	C	HIC	A	/	1005
R760	24	5%	1/16	C	HIC	A	35	1005
R761	5.11K	1%	1/16	C	HIC	A	36	1005
R762	5.11K	1%	1/16	C	HIC	A	36	1005
R763	5.11K	1%	1/16	C	HIC	A	36	1005
R764	5.11K	1%	1/16	C	HIC	A	36	1005
R765	Chip JUMPER	5%	1/16	C	HIC	A	38	1005
R766	Chip JUMPER	5%	1/16	C	HIC	A	38	1005
R767	18.7K	1%	1/16	C	HIC	A	46	1005
R768	24	5%	1/16	C	HIC	A	35	1005
R769	10K	1%	1/16	C	HIC	A	13	1005
R770	/	/	/	C	HIC	A	/	1005

Resistance

Symbol	Resistance(Ω)	Tolerance	Power(W)	Mounting-forming	Mounting-board	Mounting-surface	Assembly Part No.	Remarks
R781	10K	5%	1/10	C	M	B	42	1608
R782	10K	5%	1/10	C	M	B	42	1608
R783	10K	5%	1/10	C	M	B	42	1608
R784	10K	5%	1/10	C	M	B	42	1608
R785	10K	5%	1/10	C	M	B	42	1608
R786	10K	5%	1/10	C	M	B	42	1608
R787	100	5%	1/10	C	M	B	35	1608
R788	100	5%	1/10	C	M	B	35	1608
R789	100	5%	1/10	C	M	B	35	1608
R790	100	5%	1/10	C	M	B	35	1608
R791	100	5%	1/10	C	M	B	35	1608
R792	100	5%	1/10	C	M	B	35	1608
R801	680	5%	1/4	A	M		18	
R802	180	5%	1/6	A	M		36	
R803	820	1%	1/6	A	M		48	
R804	47	5%	1/2	A	M		15	
R805	Chip JUMPER	5%	1/16	C	HIC	A	38	1005
R806	510	5%	1/4	A	M		17	
R860	22	5%	1/4	C	M	B	52	3216
R861	22	5%	1/4	C	M	B	52	3216
R862	22	5%	1/4	C	M	B	52	3216
R905	100	1%	1/10	C	M	B	205	1608
R906	402 ~~0.65K~~	1%	1/8	C	M	B	208	2125
R907	2K	5%	1/10	C	M	B	207	1608
R911	51 ~~10~~	5%	1/10	C	M	B	31	1608
R912	51 ~~10~~	5%	1/10	C	M	B	31	1608
R913	51 ~~10~~	5%	1/10	C	M	B	31	1608
R914	51 ~~10~~	5%	1/10	C	M	B	31	1608
R915	51 ~~10~~	5%	1/10	C	M	B	31	1608
R916	51 ~~10~~	5%	1/10	C	M	B	31	1608
R990	100	5%	1/16	C	HIC	A	8	1005
R991	100	5%	1/16	C	HIC	A	8	1005
R992	100	5%	1/16	C	HIC	A	8	1005

Capacitor

Symbol	Capacity (μF)	Voltage (V)	Assortment	Mounting-forming	Mounting-board	Mounting-surface	Assembly Part No.	Remarks
C001	0.01	AC250	C	R	M		71	Murata KH
C002	0.01	AC250	C	R	M		71	Murata KH
C003	0.68	AC310	F	H	M		84	OKAYA LE-MX
C004	0.01	AC250	C	R	M		71	Murata KH
C005	0.01	AC250	C	R	M		71	Murata KH
C009	0.1	50	C	A	M		94	
C010	100	50	D	R	M		76	NICHICON VR
C011	3.3	AC310	F	H	M		85	OKAYA LE-MX
C012	/		C	R	M	/	/	
C013	0.01	AC250	C	R	M		71	Murata KH
C014	0.01	AC250	C	R	M		71	Murata KH
C015	~~4700p~~	AC250	C	R	M		~~74~~	Murata KH
C016	~~4700p~~	AC250	C	R	M		~~74~~	Murata KH
C017	~~4700p~~	AC250	C	R	M		~~74~~	Murata KH
C018	~~4700p~~	AC250	C	R	M		~~74~~	Murata KH
C021	500	450	D	H	M		72	
C022	500	450	D	H	M		72	
C023	500	450	D	H	M		72	
C025	68	450	D	H	M		87	KXG
C032	0.1	450	F	H	M		86	OKAYA AFP
C102	1000p	1k	C	P	M		67	
C103	220p	2k	C	P	M		66	
C104	100	50	D	R	M		69	
C105	0.1	50	C	A	M		94	
C106	1	50	C	A	M		77	
C107	22	25	D	R	M		80	
C108	0.047	50	C	A	M		81	
C109	15p	50	C	A	M		82	
C110	/	AC250V	C	R	M		/	
C111	470	25	D	R	M		88	
C113	/		C	R	M		/	
C114	470	25	D	R	M		88	
C115	470p	50	C	A	M		91	
C116	470	50	D	R	M		89	
C117	0.1	50	C	A	M		94	
C118	330	16	D	R	M		92	
C119	/	/	C	R	M		/	
C120	330p	50	C	A	M		93	
C121	100	25	D	R	M		102	
C122	/	25	D	R	M		/	
C123	100	10	D	R	M		103	
C124	0.1	50	C	A	M		94	
C125	0.1	50	C	C	M	B	95	1608
C126	0.1	50	C	C	M	B	95	1608
C127	0.1	50	C	C	M	B	95	1608
C128	0.1	16	C	C	HIC	B	55	1005
C129	0.1	25	C	C	HIC	B	59	1608
C130	/	50	C	A	M		/	
C131	/	50	C	A	M		/	
C132	~~0.1~~	50	C	C	M	B	/	1608
C133	0.1	25	C	C	HIC	B	59	1608
C191	0.1	25	C	C	HIC	B	63	1608
C201	0.1	16	C	C	HIC	A	55	1005
C202	0.1	16	C	C	HIC	B	55	1005
C203	/	/	C	C	HIC	A	/	1005
C204	470p	50	C	C	HIC	A	60	1005
C205	0.047	25	C	C	HIC	B	54	1005
C206	470p	50	C	C	HIC	B	60	1005
C207	470p	50	C	C	HIC	A	60	1005
C209	0.1	16	C	C	HIC	A	55	1005
C210	0.1	16	C	C	HIC	B	55	1005
C211	0.047	25	C	C	HIC	B	54	1005
C215	/	/	C	C	HIC	A	/	1005
C216	0.1	16	C	C	HIC	B	55	1005
C217	0.1	16	C	C	HIC	B	55	1005
C218	0.1	16	C	C	HIC	B	55	1005
C220	0.01	25	C	C	HIC	B	70	1005
C222	/	/	C	C	HIC	A	/	1005
C223	1000p	50	C	C	HIC	B	68	1005
C224	0.1	16	C	C	HIC	B	55	1005
C231	0.1	16	C	C	HIC	B	55	1005
C234	0.1	16	C	C	HIC	B	55	1005
C235	0.1	16	C	C	HIC	B	55	1005
C236	0.1	16	C	C	HIC	B	55	1005
C237	0.1	16	C	C	HIC	B	55	1005
C238	0.1	16	C	C	HIC	B	55	1005
C239	0.1	16	C	C	HIC	B	55	1005
C240	0.1	16	C	C	HIC	B	55	1005
C241	0.1	16	C	C	HIC	B	55	1005
C251	2200p	50	C	C	HIC	A	61	1608
C252	0.068	25	C	C	HIC	B	62	1608
C271	0.1	16	C	C	HIC	A	55	1005
C272	100p	50	C	A	M		96	
C273	100p	50	C	A	M		96	
C281	0.1	16	C	C	HIC	B	55	1005
C282	0.1	16	C	C	HIC	A	55	1005
C283	0.22	16	C	C	HIC	B	57	1608
C285	0.1	16	C	C	HIC	A	55	1005
C291	0.1	25	C	C	HIC	A	59	1608
C292	0.047	25	C	C	HIC	A	54	1005
C294	/	/	C	C	HIC	A	/	1005
C321	0.033	50	C	C	HIC	B	65	1608
C401	100	25	D	R	M		78	NICHICON VR
C430	0.1	16	C	C	HIC	A	55	1005
C431	/	25	C	A	M			
C432	0.1	16	C	C	HIC	B	55	1005
C504	100p	50	C	C	HIC	B	76	1005
C505	100p	50	C	C	HIC	B	76	1005
C506	100p	50	C	C	HIC	B	76	1005
C508	0.1	16	C	C	HIC	B	55	1005
C509	220p	50	C	C	HIC	B	67	1005

Capacitor

Symbol	Capacity (μF)	Voltage (V)	Assortment	Mounting-forming	Mounting-board	Mounting-surface	Assembly Part No.	Remarks
C601	4700p	DC1KV	C	R	M		73	
C603	~~2200p~~	DC1KV	C	R	M			
C604	0.01	DC1KV	C	R	M		68	
C611	/	50	C	A	M			
C612	/	50	C	A	M			
C621	100p	50	C	C	M	B	64	1608
C622	47	25	D	H	M		65	
C631	0.047	25	C	C	HIC	A	54	1005
C632	0.047	25	C	C	HIC	A	54	1005
C641	0.047	25	C	C	HIC	A	54	1005
C652	/	~~50~~	~~C~~	~~C~~	HIC	A	/	1005
C653	0.1	16	C	C	HIC	B	55	1005
C702	0.33	25	C	C	HIC	B	74	2125
C703	2200p	50	C	C	HIC	B	75	1005
C704	1000p	50	C	C	HIC	A	68	1005
C706	0.1	16	C	C	HIC	B	55	1005
C711	100p	50	C	C	HIC	A	73	1608
C712	100p	50	C	C	HIC	A	73	1608
C713	100p	50	C	C	HIC	A	73	1608
C714	100p	50	C	C	HIC	A	73	1608
C715	100p	50	C	C	HIC	A	73	1608
C716	100p	50	C	C	HIC	A	73	1608
C717	/	/	~~C~~	~~C~~	HIC	B	/	2125
C718	/	/	~~C~~	~~C~~	HIC	B	/	1608
C721	10	25	D	C	HIC	A	72	WR
C722	10	25	D	C	HIC	A	72	WR
C723	10	25	D	C	HIC	A	72	WR
C724	0.1	25	C	C	HIC	A	63	RM 1608
C725	0.1	25	C	C	HIC	A	63	RM 1608
C726	0.1	25	C	C	HIC	A	63	RM 1608
C731	220p	50	C	C	M	B	101	1608
C732	220p	50	C	C	M	B	101	1608
C733	220p	50	C	C	M	B	101	1608
C734	220p	50	C	C	M	B	101	1608
C735	220p	50	C	C	M	B	101	1608
C736	220p	50	C	C	M	B	101	1608
C737	100p	50	C	C	HIC	B	73	1608
C738	100p	50	C	C	HIC	B	73	1608
C739	100p	50	C	C	HIC	B	73	1608
C740	100p	50	C	C	HIC	A	73	1608
C741	100p	50	C	C	HIC	A	73	1608
C742	100p	50	C	C	HIC	A	73	1608
C751	0.01	DC1KV	C	R	M		68	
C752	/	/	~~C~~	~~R~~	M	/	/	
C762	0.01	25	C	C	HIC	A	70	1005
C764	/	/	~~C~~	~~C~~	HIC	A	/	1005
C772	0.1	50	C	C	M	B	95	1608
C801	0.022	50	C	C	HIC	A	69	1608
C802	4700p	AC250	C	R	M		70	
C803	0.022	50	F	R	M		90	
C804	0.1	AC310	F	H	M		83	OKAYA LE-MX
C805	0.1	50	C	C	M	B	95	1608
C806	0.022	50	C	C	HIC	A	69	1608
C807	0.1	50	C	C	M	B	95	1608
C808	47p	50	C	C	HIC	A	66	1005
C900	0.1	50	C	C	M	B	95	1608
C901	680p	50	C	C	M	B	98	1608
C902	680p	50	C	C	M	B	98	1608
C903	680p	50	C	C	M	B	98	1608
C904	680p	50	C	C	M	B	98	1608
C905	680p	50	C	C	M	B	98	1608
C906	680p	50	C	C	M	B	98	1608
C913	33	25	D	R	M		75	NICHICON SY(105℃)
C914	33	25	D	R	M		75	NICHICON SY(105℃)
C915	33	25	D	R	M		75	NICHICON SY(105℃)
C917	/		R	A	M			
C919	0.022	50	C	C	M		100	
C920	0.1	50	C	C	M	B	95	1608
C921	0.1	50	C	C	M	B	95	1608
C922	0.1	50	C	C	M	B	95	1608
C923	0.1	50	C	C	M	B	95	1608
C924	0.1	50	C	C	M	B	95	1608
C925	220	25	D	R	M		79	NICHICON
C927	220p	50	C	C	M	B	101	1608
C931	0.1	16	C	C	HIC	A	55	1005
C932	0.1	16	C	C	HIC	A	55	1005
C940	~~0.1~~	~~50~~	~~C~~	~~C~~	M	~~B~~	/	1608

Diode

Symbol	Type	Mounting-forming	Mounting-board	Mounting-surface	Assembly Part No.	Remarks
D101	SARS01	A	M		110	
D102	~~DA2JF23~~	C	M	B	/	
D103	D1NL20U	A	M		109	
D104	RB721Q	A	M		122	
D105	RL2Z	H	M		115	
D107	D1NL20U	A	M		109	
D108	EL1Z	A	M		121	
D109	~~DB2J314~~	C	M	B	~~186~~	
D110	AK04	A	M		123	
D001	1SS120	A	M		108	
D002	~~DA3X101K~~	C	M	B	/	1SS120
D201	KDS181-RTK/P	C	HIC	B	79	
D202	KDS181-RTK/P	C	HIC	B	79	
D251	KDS184-RTK/P	C	HIC	B	82	
D271	KDS184-RTK/P	C	HIC	B	82	
D272	KDS181-RTK/P	C	HIC	B	79	
D273	1SS352TPH3F	C	HIC	A	85	
D291	KDS226-RTK/P	C	HIC	A	83	
D310	KDS226-RTK/P	C	HIC	B	83	
D321	KDS184-RTK/P	C	HIC	B	82	
D322	KDS181-RTK/P	C	HIC	B	79	
D430	1SS120	A	M		108	
D431	~~DA3X101K~~	C	M	B	/	1SS120
D601	D30L60	H	M		113	[illegible]
D611	1SS120	A	M	B	108	
D612	1SS120	A	M	B	108	
D613	~~DA3X101K~~	C	M	B	/	1SS120
D614	~~DA3X101K~~	C	M	B	/	1SS120
D631	KDS226-RTK/P	C	HIC	A	83	DAN217
D641	1SS352TPH3F	C	HIC	A	85	DAN217
D701	/	~~C~~	HIC	~~B~~	/	
D702	/	~~C~~	HIC	~~B~~	/	
D703	/	~~C~~	HIC	~~B~~	/	
D704	/	~~C~~	HIC	~~B~~	/	
D705	/	~~C~~	HIC	~~B~~	/	
D706	/	~~C~~	HIC	~~B~~	/	
D711	D1FK60	C	HIC	A	84	
D712	D1FK60	C	HIC	A	84	
D713	D1FK60	C	HIC	A	84	
D721	1SS355VM	C	HIC	B	80	
D722	1SS355VM	C	HIC	B	80	
D723	1SS355VM	C	HIC	B	80	
D724	1SS355VM	C	HIC	A	80	
D725	1SS355VM	C	HIC	A	80	
D726	1SS355VM	C	HIC	A	80	
D731	1SS355VM	C	HIC	B	80	
D732	1SS355VM	C	HIC	B	80	
D733	1SS355VM	C	HIC	B	80	
D735	1SS355VM	C	HIC	B	80	
D761	KDS226-RTK/P	C	HIC	A	83	
D801	KDS226-RTK/P	C	HIC	A	83	
D802	KDS226-RTK/P	C	HIC	A	83	
D860	D1NK60	A	M		118	
D861	D1NK60	A	M		118	
D862	D1NK60	A	M		118	
DB1	D2SB60A	H	M		111	
DB601	D25XB60	H	M		112	
DB602	D25XB60	H	M		112	

Zener diode

Symbol	Type	Mounting-forming	Mounting-board	Mounting-surface	Assembly Part No.	Remarks
ZD101	HZS5A1	A	M		116	
ZD102	/	C	M		/	
ZD701	/	~~C~~	HIC	~~A~~	/	
ZD702	/	~~C~~	HIC	~~B~~	/	
ZD703	/	~~C~~	HIC	~~B~~	/	
ZD704	~~TFZ-22B~~	C	M	B		
ZD705	HZ22-1TA-E	A	M		117	
ZD901	~~TFZ-22B~~	C	M	B	/	
ZD902	~~TFZ-22B~~	C	M	B	/	
ZD903	/	C	M			
ZD904	HZ22-1TA-E	A	M		117	
ZD905	HZ22-1TA-E	A	M		117	
ZD911	/	C	M			
ZD912	/	C	M			
ZD913	/	C	M			

IC

Symbol	Type	Mounting-forming	Mounting-board	Mounting-surface	Assembly Part No.	Remarks
IC1	MIP4140S	H	M		141	
IC2	TD62003AFG	S	HIC	B	101	
IC3	NJM2742M	S	HIC	A	102	
IC4	NJM2392D	H	M		140	
IC5	NJM2903E	S	HIC	A	105	
IC6	μPC4742G2	S	HIC	A	104	
IC8	74AHC08PW	S	HIC	A	106	
IC10	R3112N421C-TR	S	HIC	B	100	
IC11	TD62003AP	H	M		142	
IC702	6ED003L06	S	HIC	A	103	
E²PROM	S-24C32CI-T8T1U3	S	HIC	A	99	
MICON	RX62T	S	HIC	A	97	
REG2	KIA431-A-AT/PC	R	M		143	
IPM	PS21985-4W	H	M		137	

Transistor

Symbol	Type	Mounting-forming	Mounting-board	Mounting-surface	Assembly Part No.	Remarks
Q102	~~DTC123YK~~	C	M	B	125	
Q105	RRR040P03TL	C	M	B	124	
Q121	SSM3J314T	C	HIC	B	92	
Q122	RN1115TE85L	C	HIC	B	93	
Q203	DTC143EEBTL	C	HIC	B	90	
Q251	KTC3875SGR	C	HIC	B	88	
Q273	RN1102TE	C	HIC	A	91	
Q430	KTA200-Y-A	R	M		130	
Q431	KTC3198-GR	R	M		132	
Q432	KTA200-Y-A	R	M		130	
Q601	GT30J126	H	M		128	
Q602	GT30J126	H	M		128	
Q621	2SJ167	R	M		133	
Q623	KTC200-Y	R	M		134	
Q624	2SC1214CTZ	R	M		135	
Q625	2SA673CTZ	R	M		136	
Q641	RN1102TE	C	HIC	A	91	[illegible]
Q701	DTC114EEBTL	C	HIC	A	89	
Q702	DTC114EEBTL	C	HIC	A	89	
Q703	DTC114EEBTL	C	HIC	A	89	
Q711	P5F50NP2F	H	M		138	
Q712	P5F50NP2F	H	M		138	
Q713	P5F50NP2F	H	M		138	
Q714	P5F50NP2F	H	M		138	
Q715	P5F50NP2F	H	M		138	
Q716	P5F50NP2F	H	M		138	

Inductor

Symbol	Type	Mounting-forming	Mounting-board	Mounting-surface	Assembly Part No.	Remarks
L001	JUMPER	A	M		~~191~~	
L002	JUMPER	A	M			
L003	~~JUMPER~~	A	M			
L003A	NLCV32T4R7	C	M	B	152	3225
L004	NORMAL COIL	H	M		189	
L005	JUMPER	A	M		~~190~~	
L006	FBAD4HA600BB-00	A	M		~~191~~	
L101	JUMPER	A	M			
L102	RCH108NP-331K	H	M		153	SUMIDA
L103	JUMPER	A	M			
L104	JUMPER	A	M			
L105	JUMPER	A	M			
L430	JUMPER	A	M			
L701	JUMPER	A	M			
L801	IF-TRANS	H	M		148	
L810	/	~~C~~	HIC	~~A~~	/	
T101	RRMF4331	H	M		146	
CT1	S19-J299CT	H	M		147	
NF1	RRMH3835	H	M		150	
NF2	RRMH3900	H	M		151	

Jumper

Symbol	Exist/No	Mounting-forming	Mounting-board	Mounting-surface	Assembly Part No.	Remarks
JP01	No	~~A~~	M	/	/	
JP02	No	~~A~~	M	/	/	
CJ101	No	A	M	B		
JP1	No	~~C~~	HIC	~~A~~	/	1005
JP2	No	~~C~~	HIC	~~A~~	/	1005
JP3	Exist	C	HIC	A	38	1005
JP4	Exist	C	HIC	A	38	1005
JP5	No	C	HIC	A	/	1005

Oscillator

Symbol	Type	Mounting-forming	Mounting-board	Mounting-surface	Assembly Part No.	Remarks
X1	CSTCE12M5G	C	HIC	A	96	12.5MHz

LED

Symbol	Type	Mounting-forming	Mounting-board	Assembly Part No.	Remarks
LD301	SLR-342VC	R	M	114	RED

Photo coupler

Symbol	Type	Mounting-forming	Mounting-board	Assembly Part No.	Remarks
PQ101	PS2501-A	H	M	119	
PQ401	LTV-817CHA	H	M	120	
PQ402	LTV-817CHA	H	M	120	
PQ403	LTV-817CHA	H	M	120	
PQ404	LTV-817CHA	H	M	120	

Relay

Symbol	Type	Mounting-forming	Mounting-board	Assembly Part No.	Remarks
RL1	G4A-1A-PE	H	M	105	
RL2	ALD112B01	H	M	106	
RL3	ALD112B01	H	M	106	

Fuse

Symbol	Type	Mounting-forming	Mounting-board	Assembly Part No.	Remarks
F1	25Aヒューズ	H	M	163	SOLDER TYPE
F3	3A ~~2A~~-FUSE-WE	H	M	165	LEAD TYPE
F4	2A-FUSE-WE	H	M	166	LEAD TYPE
F5	3.15A-FUSE	H	M	164	SOLDER TYPE
F6	3.15A-FUSE	H	M	164	SOLDER TYPE

Fuse Clip

Symbol	Type	Mounting-forming	Mounting-board	Assembly Part No.	Remarks
F5, F6用	RRPM3094	R	M	168	
F1用	RRPM1075	H	M	167	

Connector

Symbol	Type	Mounting-forming	Mounting-board	Assembly Part No.	Remarks
CN2	VH 2P(/4)	H	M	170	赤
CN8	XA 2P	H	M	171	白
CN9	XA 2P	H	M	172	黒
CN10	XA 2P	H	M	173	赤
CN11	XA 2P	H	M	179	青
CN15	XA 6P	H	M	174	白
CN17	PH 4P	H	M	175	白
CN18	PH 11P	H	M	177	白
CN20	PH 8P	H	M	176	白
CN24	VH 3P(/5)	H	M	178	白
CN25	~~XA 4P~~	H	M	/	白
CN26	PA 3P	H	M	180	白
CN27	XH 2P	H	M	181	白
CN30	~~VH 2P~~	H	M	/	白

Switch

Symbol	Type	Mounting-forming	Mounting-board	Assembly Part No.	Remarks
SW	EVQPAE07K	H	M	155	

250TAB

Symbol	Dwg./No	Mounting-forming	Mounting-board	Mounting-surface	Assembly Part No.	Remarks
TAB3	RRPJ2142	R	M	A	192	
TAB4	RRPJ2142	R	M	A	192	

Surge absorbers

Symbol	Type	Mounting-forming	Mounting-board	Assembly Part No.	Remarks
VS1	ERZVA9V431	R	M	158	
VS2	ERZVA9V431	R	M	158	
VS3	ERZVA5V471	R	M	159	
VS5	ERZVA9V431	R	M	158	
VS8	450NR-12D	R	M	157	
VS9	~~450NR-12D~~	R	M	/	
SA	DE37-102MF	R	M	160	
SK1	RE1201-C	H	M	161	

BLOCK DIAGRAM

MODEL RAK-18/25/35/50PEC
RAK-25/35/50PECC
RAK-10/14/20PECI

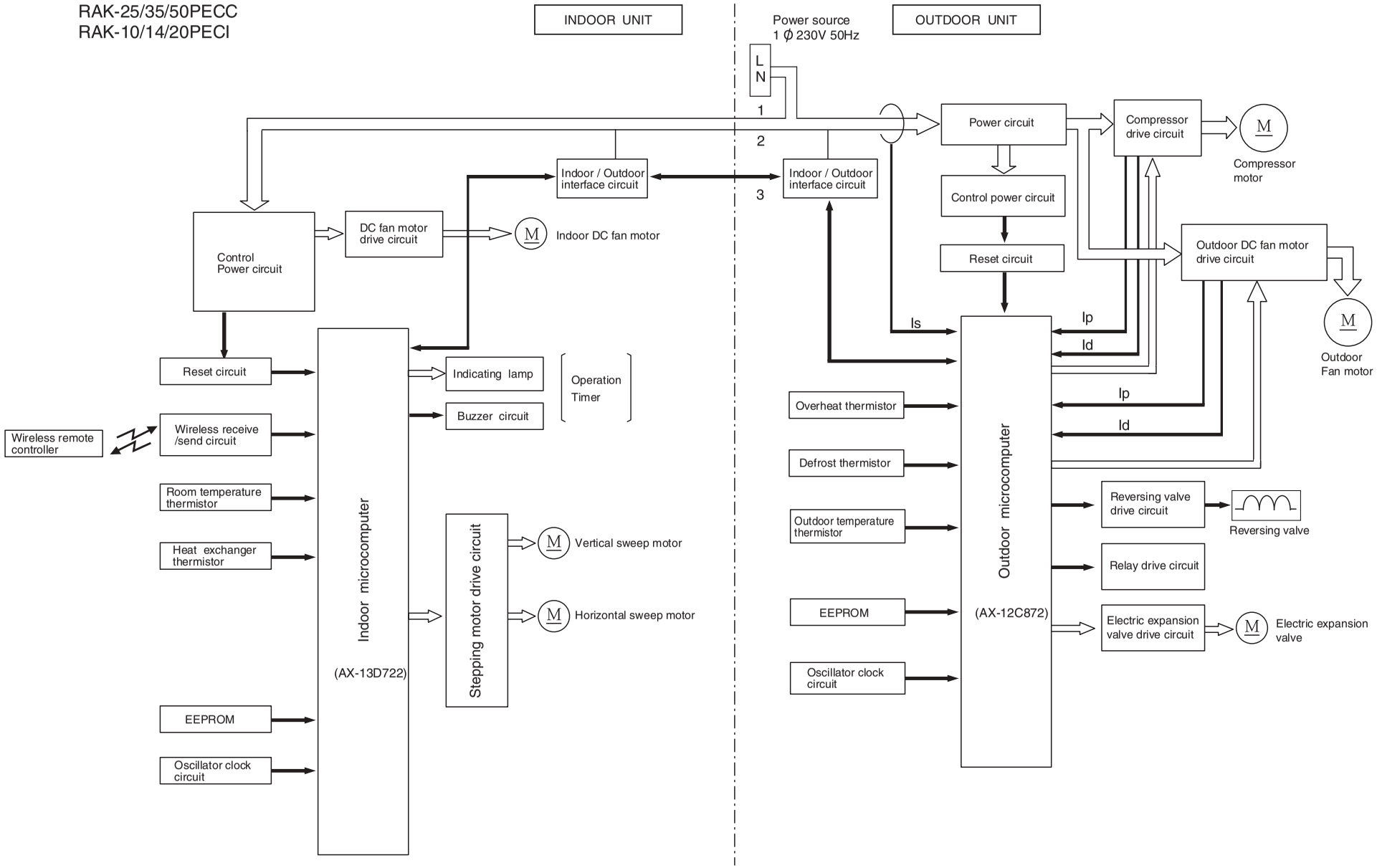

BASIC MODE

MODEL RAK-18/25/35/50PEC
RAK-25/35/50PECC
RAK-10/14/20PECI

Operation mode		Cooling	Dehumidifying	Heating
Basic operation of start/stop button				
Timer functions	Off-timer			
Timer functions	On-timer	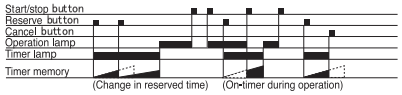		
Timer functions	Off -> On On -> Off timer	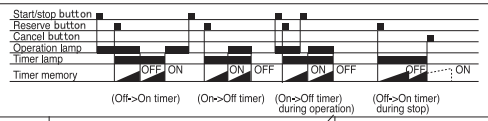		
Fan speed mode (indoor fan)	Auto	Changes from "Hi" to "Med" or "Lo" depending on room temperature. 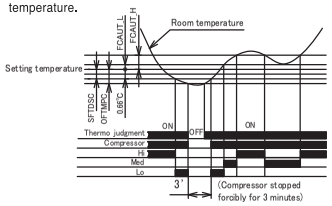 1. Runs at "Hi" until room temperature reaches to "setting temperature-SFTDSC" after operation is started. 2. Runs at "ultra-Lo" when thermo is off.		Set to "ultra-Lo","Silent","Lo","Med","Hi","ultra-Hi" or "stop" depending on the room temperature, time and heat exchanger temperature. Set to "stop" if the heat exchanger temperature is "DNZKOF" during Thermo OFF.(When reach at "DNZKON", fan speed set to "ultra-Lo" again.) 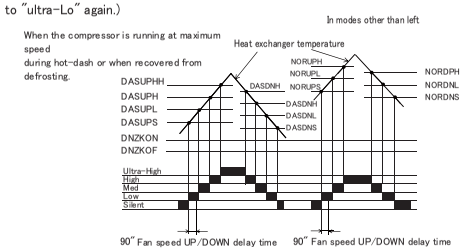
Fan speed mode (indoor fan)	Hi	Set to "ultra-Hi" when the compressor runs at cold dash mode speed, and to "Hi" in other modes. Runs at "ultra-Lo" when thermo is off. (Only for Caribbean area: Runs at "Hi" when thermo is off.)		Set to "ultra-Lo","Silent","Lo","Med","Hi","ultra-Hi" or "stop" depending on the room temperature, time and heat exchanger temperature. Set to "stop" if the heat exchanger temperature is "DNZKOF" during Thermo OFF.(When reach at "DNZKON", fan speed set to "ultra-Lo" again.) Set to "ultra-Hi" when the compressor is running at maximum speed during hot dash or when recovered from defrosting.
Fan speed mode (indoor fan)	Med	Operates at "Med" regardless of the room temperature. Runs at "ultra-Lo" when thermo is off. (Only for Caribbean area: Runs at "Med" when thermo is off.)		Set to "ultra-Lo","Silent","Lo","Med","Hi","ultra-Hi" or "stop" depending on the room temperature, time and heat exchanger temperature. Set to "stop" if the heat exchanger temperature is "DNZKOF" during Thermo OFF.(When reach at "DNZKON", fan speed set to "ultra-Lo" again.)
Fan speed mode (indoor fan)	Lo	Operates at "Lo" regardless of the room temperature. Runs at "ultra-Lo" when thermo is off. (Only for Caribbean area: Runs at "Lo" when thermo is off.)	Set to "Lo" in modes other than when the compressor stops.	Set to "ultra-Lo","Silent","Lo","Med","Hi","ultra-Hi" or "stop" depending on the room temperature, time and heat exchanger temperature. Set to "stop" if the heat exchanger temperature is "DNZKOF" during Thermo OFF.(When reach at "DNZKON", fan speed set to "ultra-Lo" again.) The fan speed is controlled by the heat exchanger temperature; the overload control is executed as in the following diagram: 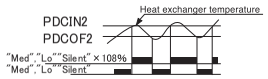
Fan speed mode (indoor fan)	Silent	Operates at "Silent" regardless of the room temperature. Runs at "ultra-Lo" when thermo is off. (Only for Caribbean area: Runs at "Silent" when thermo is off.)	Set to "Silent" in modes other than when the compressor stops.	
Basic operation of temperature controller		See page 30.	See page 32.	See page 34.

Table 1 Mode data file

MODEL	RAK-18PEC	RAK-25PEC RAK-25PECC RAK-10PECI	RAK-35PEC RAK-35PECC RAK-14PECI	RAK-50PEC RAK-50PECC RAK-20PECI
LABEL NAME	VALUE			
WMAX	4200 min^{-1}	6200 min^{-1}	6700 min^{-1}	6000 min^{-1}
WMAX2	4200 min^{-1}	6200 min^{-1}	6700 min^{-1}	6000 min^{-1}
WSTD	3100 min^{-1}	4500 min^{-1}	5700 min^{-1}	4700 min^{-1}
WJKMAX	2800 min^{-1}	4200 min^{-1}	5500 min^{-1}	4100 min^{-1}
WBEMAX	2800 min^{-1}	3800 min^{-1}	5000 min^{-1}	3500 min^{-1}
WSZMAX	2800 min^{-1}	3700 min^{-1}	4000 min^{-1}	3000 min^{-1}
CMAX	4600 min^{-1}	4600 min^{-1}	6000 min^{-1}	5500 min^{-1}
CMAX2	4600 min^{-1}	4600 min^{-1}	6000 min^{-1}	6000 min^{-1}
CSTD	3200 min^{-1}	3200 min^{-1}	4600 min^{-1}	4750 min^{-1}
CJKMAX	3000 min^{-1}	3000 min^{-1}	4400 min^{-1}	4100 min^{-1}
CBEMAX	2800 min^{-1}	2800 min^{-1}	3800 min^{-1}	3000 min^{-1}
CSZMAX	2200 min^{-1}	2200 min^{-1}	3500 min^{-1}	2700 min^{-1}
WIN-CMPH	2000 min^{-1}	2000 min^{-1}	2000 min^{-1}	2300 min^{-1}
WIN-CMPL	2000 min^{-1}	2000 min^{-1}	2000 min^{-1}	2300 min^{-1}
CMIN	2000 min^{-1}	2000 min^{-1}	2000 min^{-1}	1800 min^{-1}
STARTMC	90 Seconds	90 Seconds	90 Seconds	90 Seconds
DWNRATEW	80%	80%	80%	80%
DWNRATEC	60%	60%	60%	70%
SHIFTW	0.00℃	0.00℃	0.00℃	0.00℃
SHIFTC	0.00℃	0.00℃	0.00℃	0.00℃
CLMXTP	30.00℃	30.00℃	30.00℃	30.00℃
TEION	2.00℃	2.00℃	2.00℃	2.00℃
TEIOF	6.00℃	6.00℃	6.00℃	9.00℃
SFTDSW	1.00℃	1.00℃	0.66℃	0.66℃
DFTIM-OTP0	43 Minutes	43 Minutes	43 Minutes	43 Minutes
DFTIM-OTP5	43 Minutes	43 Minutes	43 Minutes	43 Minutes
DFTIM-OTP10	43 Minutes	43 Minutes	43 Minutes	43 Minutes
FCAUT-L	0.66℃	0.66℃	0.66℃	0.66℃
FCAUT-H	2.00℃	2.00℃	2.00℃	2.00℃
SFTDSC	0.66℃	0.66℃	0.66℃	0.66℃
OFTMPC	1.00℃	1.00℃	1.00℃	1.00℃
DASUPHH	43.00	45.00	45.00	39.00
DASDNHH	39.00	41.00	41.00	36.00
DASUPH	38.00	40.00	40.00	35.00
DASDNH	33.33	35.33	35.33	32.00
DASUPL	33.00	35.00	35.00	31.00
DASDNL	28.00	28.00	28.00	29.00
DASUPS	28.00	28.00	28.00	28.00
DASDNS	27.00	27.00	27.00	26.00
NORUPH	45.00	45.00	45.00	45.00
NORDNH	36.00	40.00	40.00	38.00
NORUPL	36.00	37.00	37.00	37.00
NORDNL	33.00	33.00	33.00	33.66
NORUPS	33.00	33.00	33.00	33.00
NORDNS	30.00	30.00	30.00	30.00
PDCIN2	50.00	50.00	54.00	50.00
PDCOF2	45.00	45.00	48.00	48.00
DNZKON	15.00	15.00	15.00	15.00
DNZKOF	13.00	13.00	13.00	13.00
FNUPPW-C	30 min^{-1}	30 min^{-1}	30 min^{-1}	30 min^{-1}
DFMAX-STD	5500 min^{-1}	5500 min^{-1}	5500 min^{-1}	4500 min^{-1}
DFMAX-ATF	5500 min^{-1}	5500 min^{-1}	5500 min^{-1}	4000 min^{-1}

Basic Cooling Operation

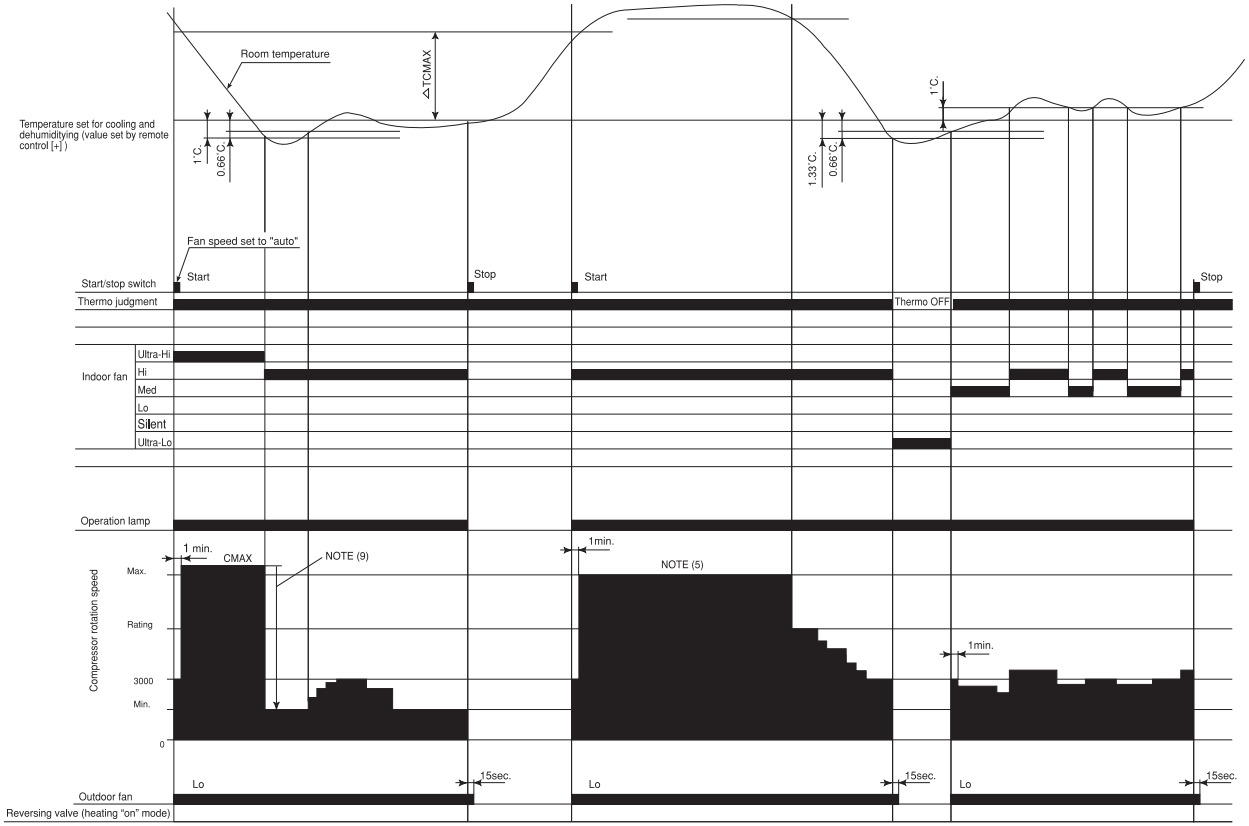

Notes:

(1) Condition for entering into Cool Dashed mode. When fan set to "Hi" or "Auto and when the compressor speed (P section) due to temperature difference between setting temperature (including the correction shift only) and room temperature is CMAX or higher.

(2) Cool Dashed will release when i) a maximum 25 minutes is lapsed and ii) room temperature is lower than set temperature –3°C (thermo off) and iii) when room temperature has achieved setting temperature –1°C then maximum Cool Dashed time will be revised to 20 minutes. And iv) indoor fan is set to Lo and Med fan mode and v) change operation mode.

(3) During Cool Dashed operation, thermo off temperature is set temperature (with shift value) –3°C. After thermo off, operation continue in Fuzzy control mode.

(4) Compressor minimum "ON" time and "OFF" time is 3 minutes.

(5) During normal cooling mode, compressor maximum rpm CMAX will maintain for 60 minutes if indoor temperature is lower than CLMXTP. No time constrain if indoor temperature is higher than CLMXTP.

(6) When fan is set to "Hi", compressor rpm will be limited to CSTD.

(7) When fan is set to "Med", compressor rpm will be limited to CJKMAX.

(8) When fan is set to "Lo", compressor rpm will be limited to CBEMAX.

(9) During Cool Dashed, when room temperature reaches set temperature –1°C compressor rpm is actual rpm x DWNRATEC.

Cooling Defrost

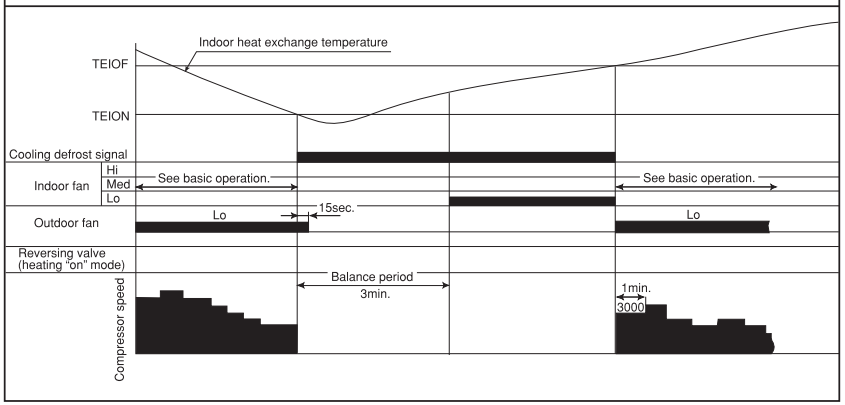

Cooling Powerful Operation

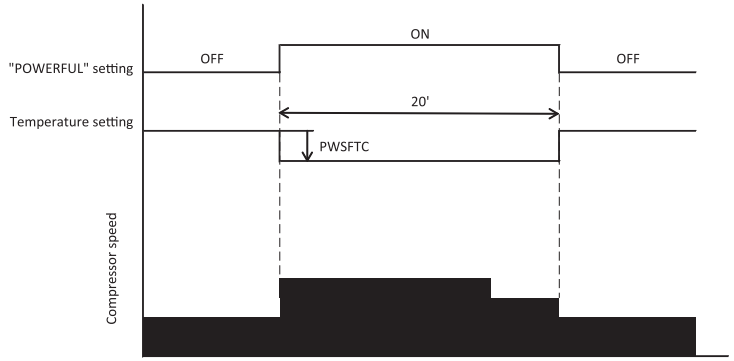

Notes :

(1) Pressing the "POWERFUL" button will reduce the temperature setting by PWSFTC.
(2) The powerful operation is for 20 minutes after setting.
(3) Operation is continued forcibly thermo-ON for 20 minutes after the powerful operation is finished.
(4) Pressing the "START/STOP" button and "POWERFUL"button during powerful operation wil cancel the powerful operation.
(5) If the sleep timer is set during powerful operation, the powerful operation will be canceled.
(6) When the powerful operation is set, the fan speed will be set to "HIGH" and the compressor's maximum speed will be set to CMAX2 during powerful operation. The compressor's lower limit speed is CKYMIN_PW.
(7) The fan speed increases by FNUPPW_C.
(8) After the powerful operation is ended, the system automatically operates with the previous settings used before the powerful operation.

Dehumidifying

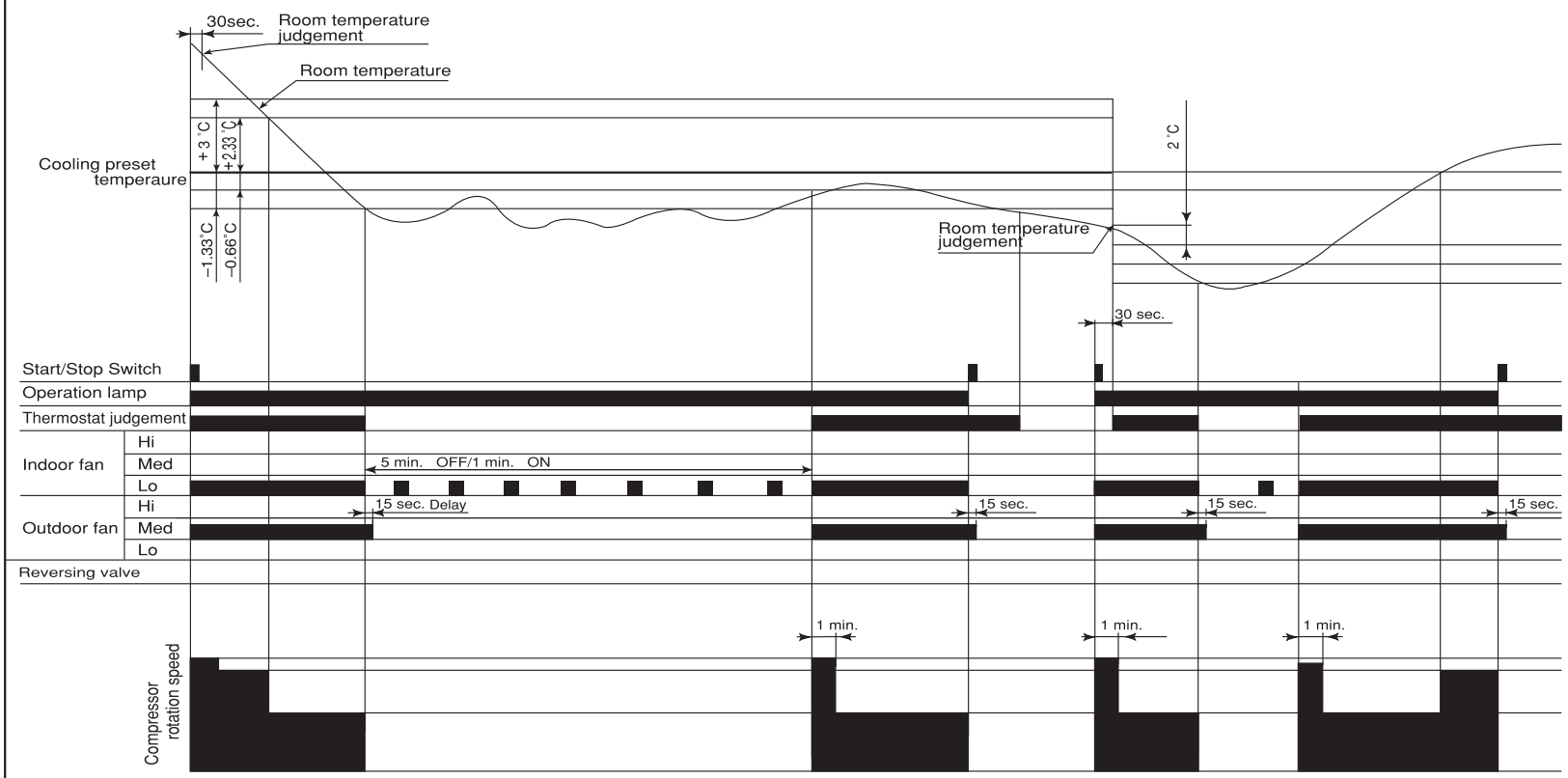

Notes:

(1) If the room temperature is (cooling preset temperature) - (1.33°C) or less after 30 seconds from starting the operation, the operation is done assuming as the preset temperature = (room temperature at the time) - (2°C).

(2) The indoor fan is operated in the "Lo" mode. During thermo OFF indoor fan will be OFF for 5 minutes and ON for 1 minute.

(3) When the operation is started by the themostat turning ON, the start of the indoor fan is delayed 32 seconds after the start of compressor operation.

(4) The compressor is operated forcedly for 3 minutes after operation is started.

(5) The minimum ON time and OFF time of the compressor are 3 minutes.

Dehumidifying Powerful Operation

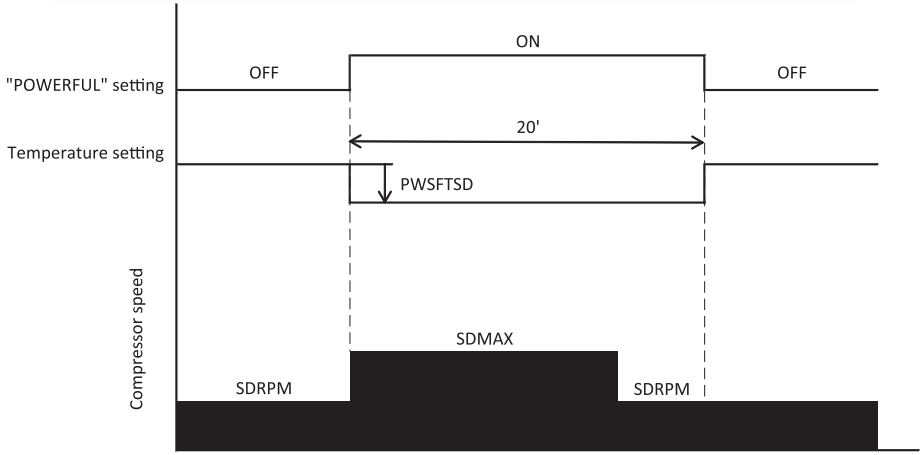

Notes :

(1) Pressing the "POWERFUL" button will reduce the temperature setting by PWSFTSD.
(2) The powerful operation is for 20 minutes after setting.
(3) Operation is continued forcibly thermo-ON for 20 minutes after the powerful operation is finished.
(4) Pressing the "START/STOP" button and "POWERFUL"button during powerful operation wil cancel the powerful operation.
(5) If the sleep timer is set during powerful operation, the powerful operation will be canceled.
(6) If the differential(the room temperature - the temperature setting) is "the differential≧3 ℃" after powerful setting , the compressor's maximum speed during powerful operation will be set to SDMAX. Then the differential reduce "the differential ≦2.33 ℃" during powerful operation,the compressor's speed will be set to SDRPM.
If the differential(the room temperature - the temperature setting) is "the differential ＜ 3 ℃" after powerful setting , the compressor's minimum speed during powerful operation will be set to SDRPM.
(7) After the powerful operation is ended, the system automatically operates with the previous settings used before the powerful operation.

Basic Heating Operation

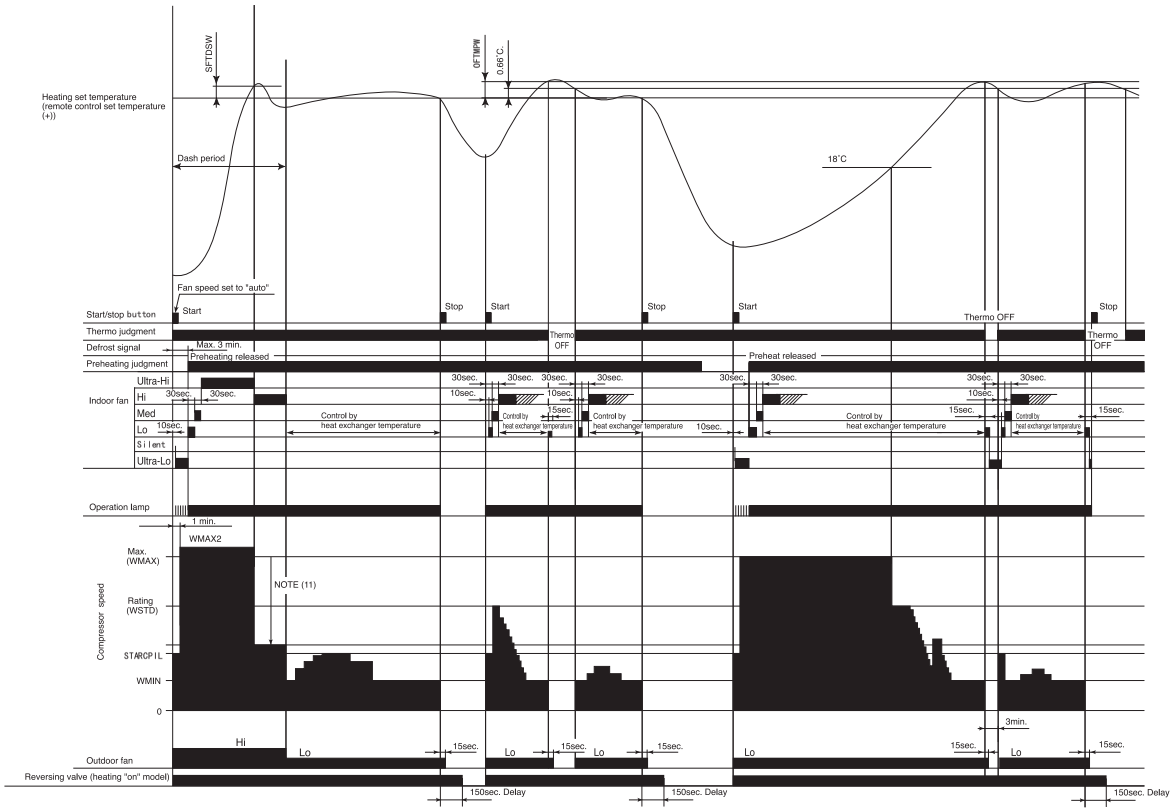

Notes:

(1) Condition for entering into hot dashed mode. When fan set to "Hi" or "Auto" and i) room temperature is 18 or less, and ii) outdoor temperature is 10 or less, and iii) compressor speed (P section) due to temperature difference between setting temperature(including shift value only) and room temperature is WMAX or more.

(2) The maximum compressor speed period during hot dash is finished when i) room temperature has reached the setting temperature + SFTDSW. ii) thermo off.

(3) During hot dashed operation, thermo off temperature is setting temperature (with shift value) +3 . After thermo off, operation continue inn Fuzzy control mode.

(4) Minimum "ON" time and minimum "OFF" time of compressor operation is 3 minutes.

(5) During normal heating mode, compressor maximum rpm WMAX will maintain for 120 minutes. No time limit constrain if room temperature is 18 or less and outdoor temperature is 2 or less.

(6) During preheating or defrosting or auto fresh defrosting mode, indoor unit operation lamp will blink at interval of 2 seconds "ON" and 1 second "OFF".

(7) When heating mode starts, it will enter into preheating mode if indoor heat exchanger temperature is less than YNEOF + 0.33 .

(8) When fan is set to "Med" or "Lo" or "Silent", compressor rpm will be limited to "WJKMAX" or "WBEMAX" or "WSZMAX".

(9) During "Ultra-Lo" mode, if room temperature is 18 or less, indoor fan will stop. If room temperature is 18 + 0.33 or more, fan will continue in "Ultra-Lo" mode. However, "Ulrta-Lo" mode during preheating or preheating after defrosting does not stop if room temperature is 18 or less.

(10) During hot dashed or outdoor temperature is -5 or less, compressor rpm is WMAX2.

(11) During hot dashed, when room temperature reaches setting temperature + SFTDSW compressor rpm is actual rpm x DWNRATEW.

Reversing valve defrosting

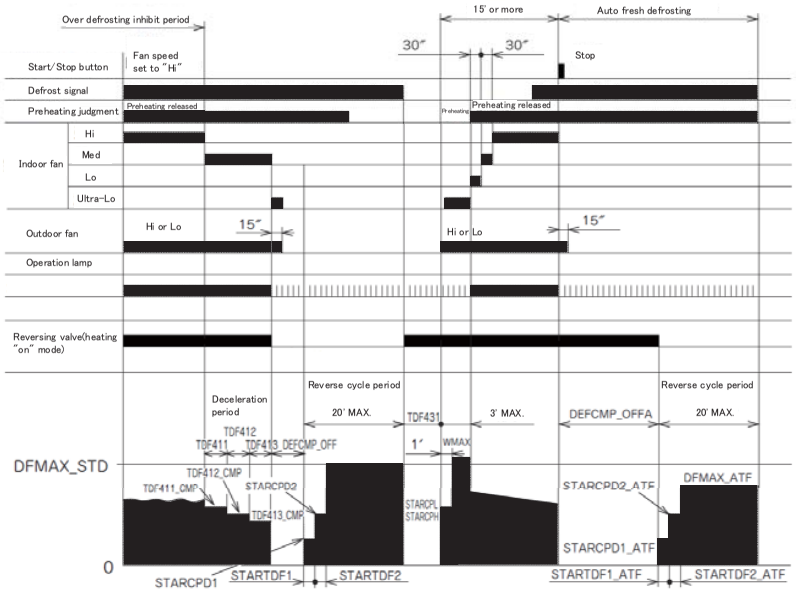

Notes:

(1) The defrosting inhibit period is set as shown in the diagram below. When defrosting has finished once, the inhibit period is newly set, based on the outdoor temperature when the compressor was started. During this period, the defrost signal is not accepted.

(2) If the difference between the room and outdoor temperature is large when defrosting is finished, the maximum compressor speed (WMAX) or (WMAX2) can be continued for 120 minutes maximum.

(3) The defrosting period is 12 minutes maximum.

(4) When operation is stopped during defrosting, it is switched to auto refresh defrosting.

(5) Auto refresh defrosting cannot be engaged within 15 minutes after operation is started or defrosting is finished.

Setting Defrosting Inhibit Period

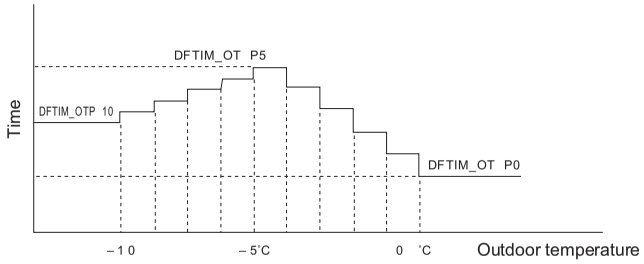

Notes:

(1) The first inhibit time after operation start is set to DFTIM_FST.

(2) From the second time onwards, the inhibit time is set according to the time required for defrosting.
Reverse cycle operation time ≧ [DEFCOL] : DEFTIM_COL is set.
Reverse cycle operation time < [DEFCOL] : The time corresponding to outdoor temperature is set.

Heating Powerful Operation

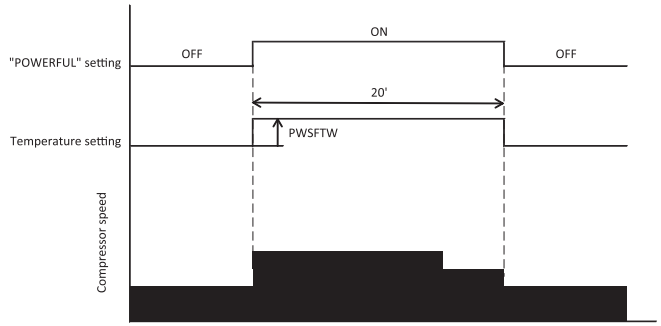

Notes :

(1) Pressing the "POWERFUL" button will increase the temperature setting by PWSFTW.
(2) The powerful operation is for 20 minutes after setting.
(3) Operation is continued forcibly thermo-ON for 20 minutes after the powerful operation is finished.
(4) Defrost is inhibited for 20 minutes after the start of the powerful operation.
(5) Pressing the "START/STOP" button and "POWERFUL"button during powerful operation wil cancel the powerful operation.
(6) If the sleep timer is set during powerful operation, the powerful operation will be canceled.
(7) When the powerful operation is set, the fan speed will be set to "HIGH" and the compressor's maximum speed will be set to WMAX2 during powerful operation. The compressor's lower limit speed is WKYMIN_PW.
(8) After the powerful operation is ended, the system automatically operates with the previous settings used before the powerful operation.

Leave Home

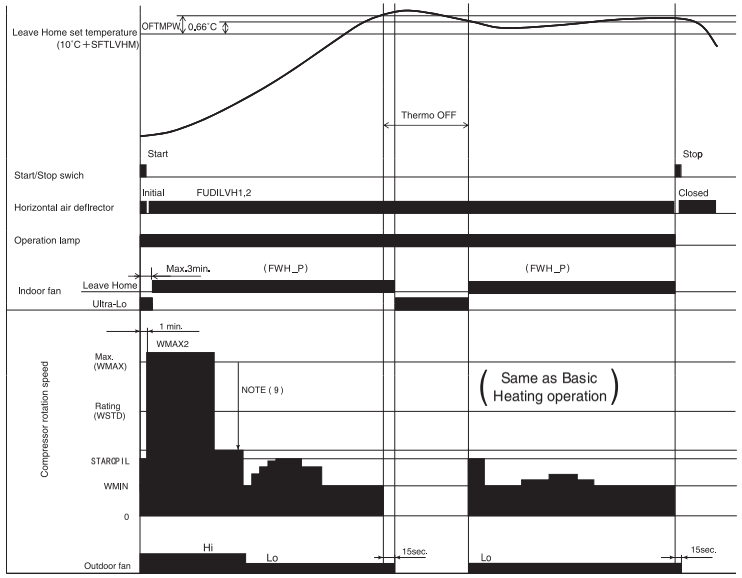

Notes:

Perform Leave Home operation according to the following control contents.

(1) Operation mode : Heating
(2) Setting temperature : 10˚C
(3) Shift value : + SFTLVHM
(4) Indoor fan speed : FWH_P
(5) Outdoor fan speed :
(6) Compressor start control :
(7) Compressor speed :
} Same as Basic Heating operation
(8) Operation lamp : ON

ECO

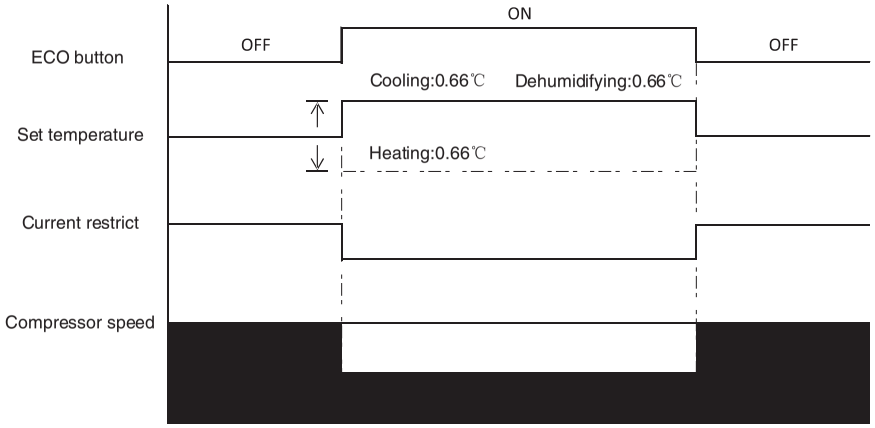

Notes:

- Can't set POWERFUL and ECO at the same time.
- During FAN operation,can't set ECO.

REFRIGERATING CYCLE DIAGRAM

MODEL RAK-18/25PEC, RAK-25PECC, RAK-10PECI
RAC-18/25WEC RAC-10WECI

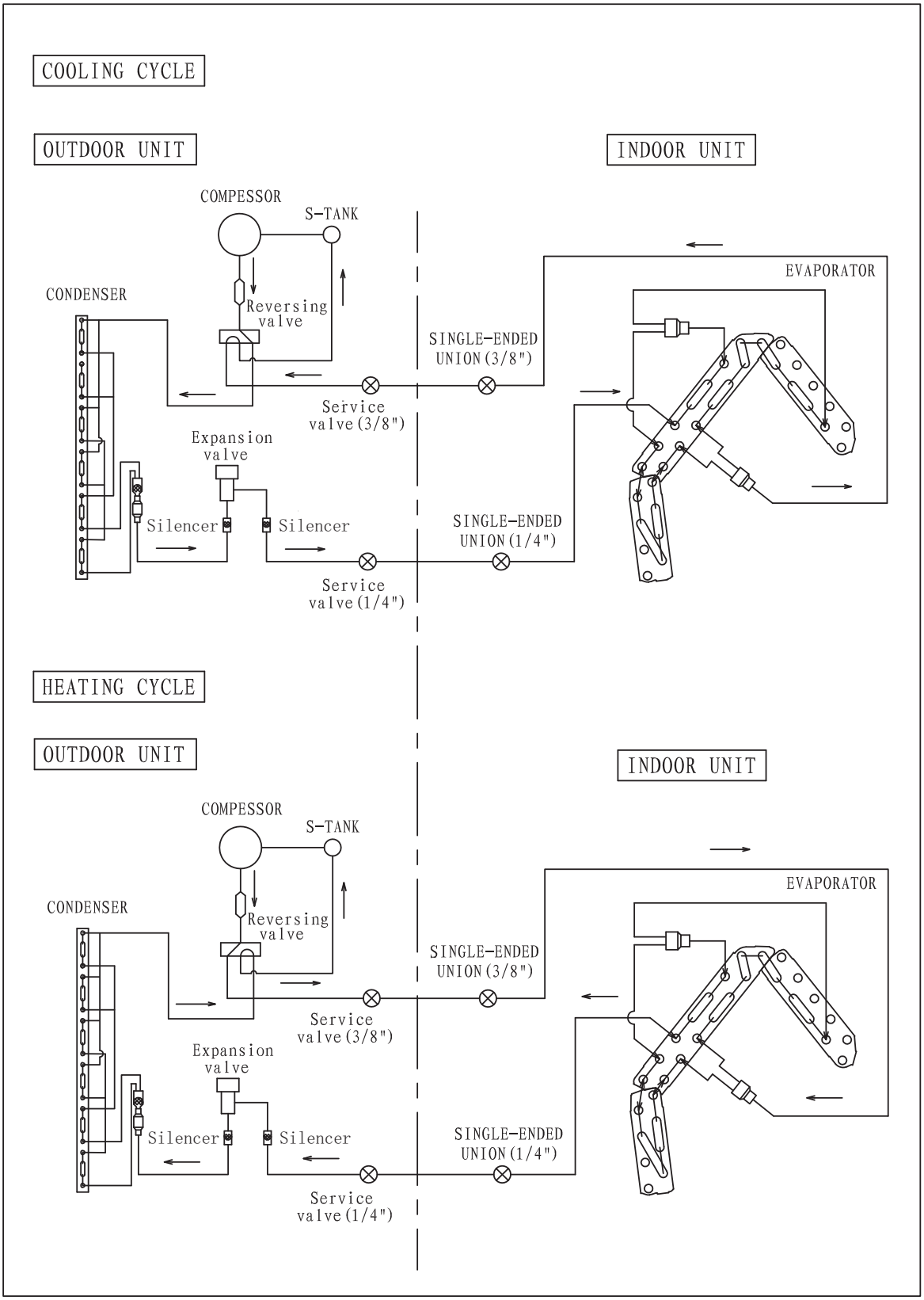

REFRIGERATING CYCLE DIAGRAM

MODEL RAK-35PEC, RAK-35PECC, RAK-14PECI
RAC-35WEC, RAC-14WECI

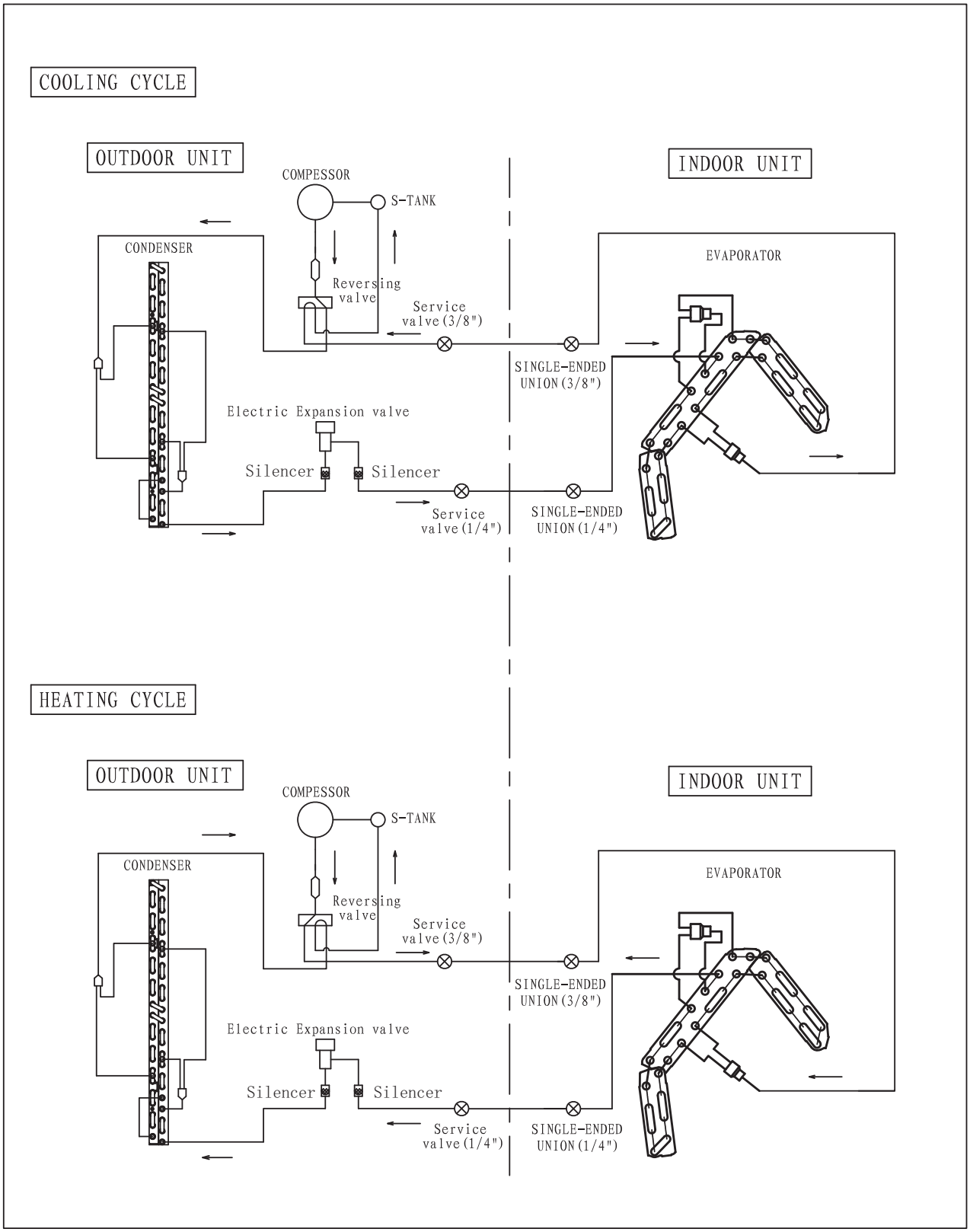

REFRIGERATING CYCLE DIAGRAM

MODEL RAK-50PEC, RAK-50PECC, RAK-20PECI
RAC-50WEC RAC-20WECI

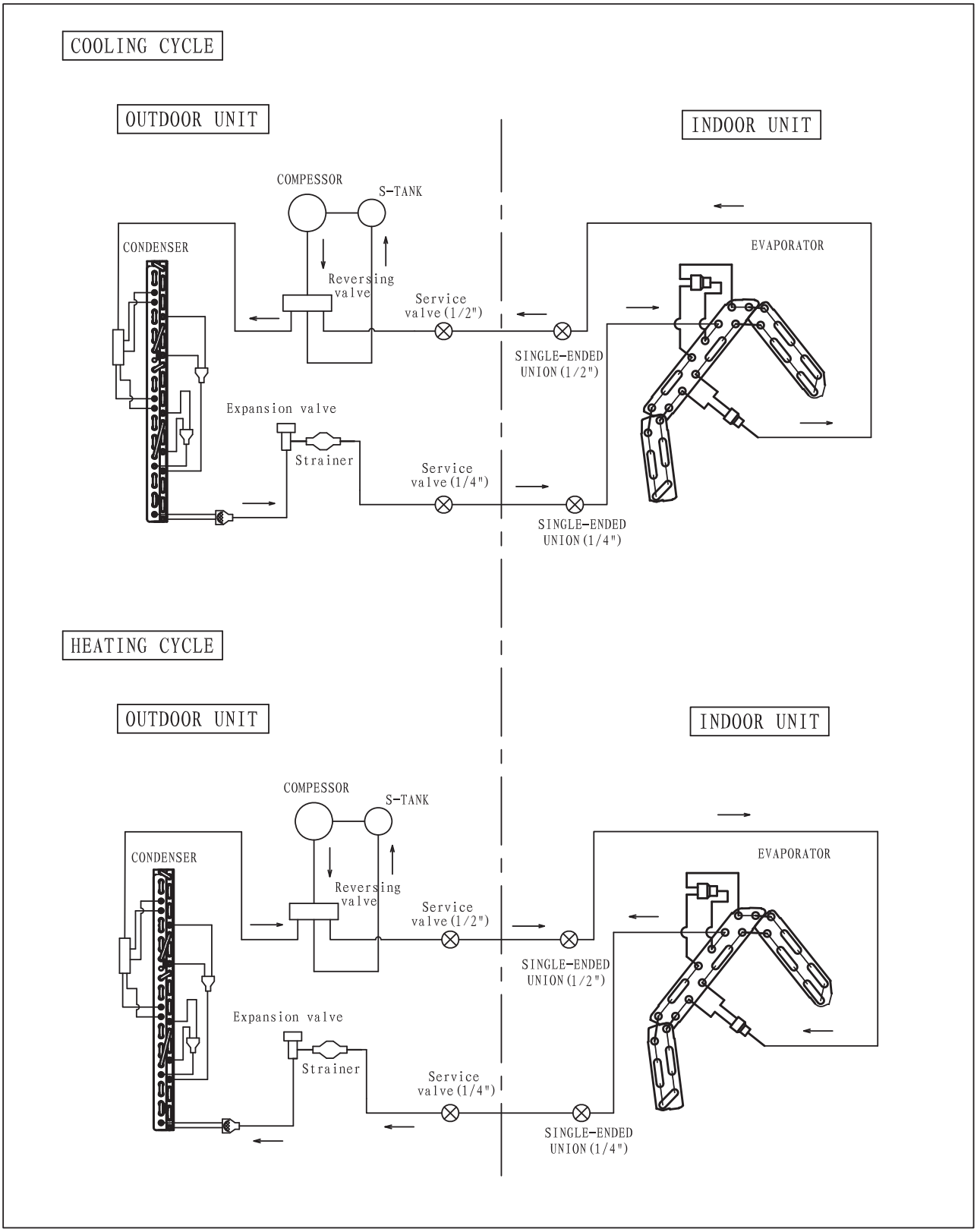

Procedure for Disassembly and Reassembly

INDOOR UNIT RAK-18/25/35/50PEC
RAK-25/35/50PECC
RAK-10/14/20PECI

1. Front Panel

Be sure to hold the front panel with both hands to detach and attach it.

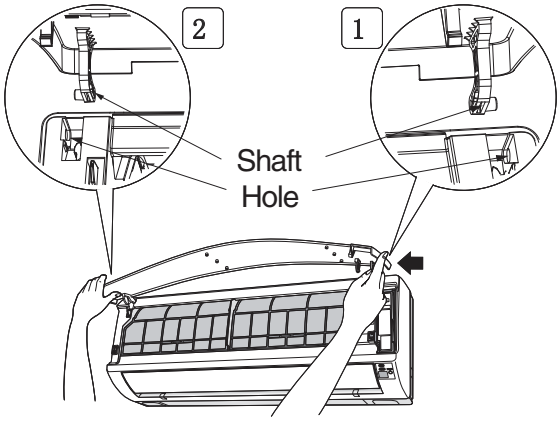

Fig. 1

When the front panel is fully opened with both hands, push the right arm to the inside to release it, and while closing the front panel slightly, put it out forward.

2. Front cover

(1) After removing the screw of fixing the terminal cover, hold the handle of terminal cover and remove it.
(2) After removing two screws, pull the center of the front cover forward and release the claws
(3) Hold the front cover at both lower sides and pull them forward to remove.

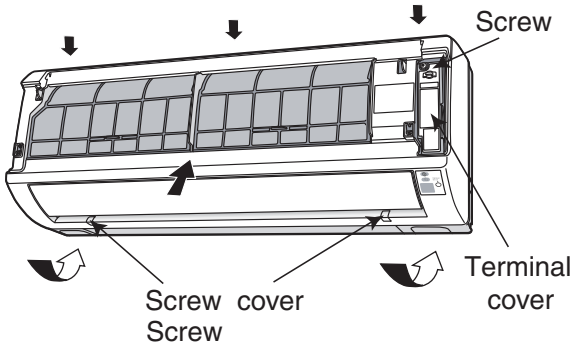

Fig. 2

3. Control P.W.B. and Indicating P.W.B.

(1) Remove each connector from the lead wire.
(2) Remove the four P.W.B. supports from the control P.W.B.
(3) Pull the support hook at the upper side of the indication lamp of the indicating P.W.B. and pull out the P.W.B. forward.

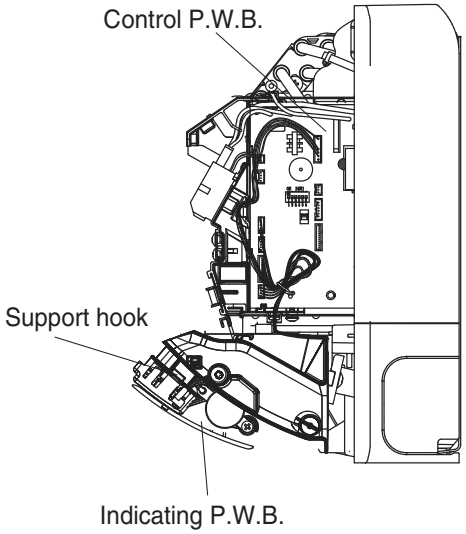

Fig. 3

4. Tangential air flow fan and fan motor

(1) Press to lower the hook at the center of the unit a little and pull the claw forward to remove the drain pan.

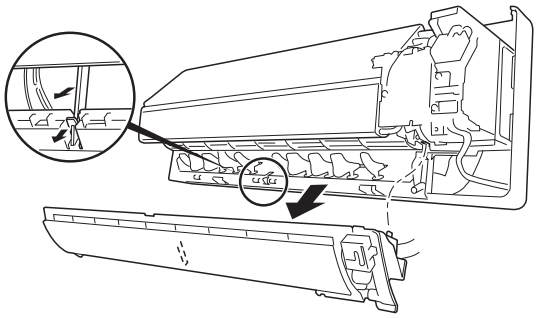

Fig. 4

(2) Remove the screw from the upper and lower bearing covers.
(3) Remove the locking hook of the lower bearing cover from the Cabinet.

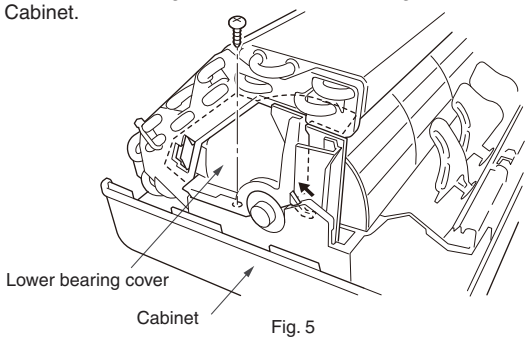

Fig. 5

(4) Remove two lock screws from the fan motor holder
(5) Pull up the evaporator by holding it at the lower side. Insert a screw driver through the space between the evaporator and drain chute and loosen the fan lock screw to remove the fan motor.

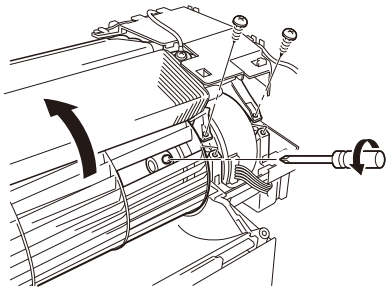

Fig. 6

<OUTDOOR UNIT> MODEL RAC-18/25/35WEC
RAC-10/14WECI

1. Electrical Parts

(1) Remove the upper cover fixing screws and lift the cover to remove it.
(2) Remove the service valve cover.
(3) Remove the terminal plate cover.
(4) Remove the right side cover.

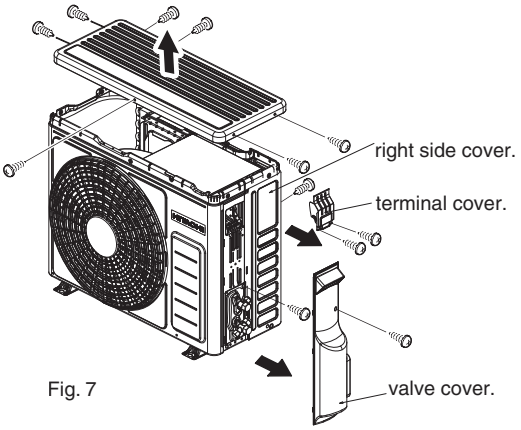

Fig. 7

(5) Remove the electrical box fixing screws and GND wire fixing screw.

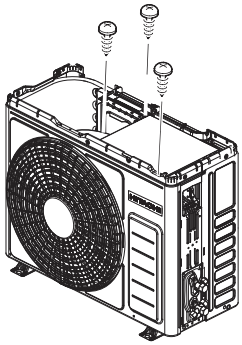

Fig. 8

(6) Remove P lock which binds lead wires.
(7) Set the electrical box upside down.

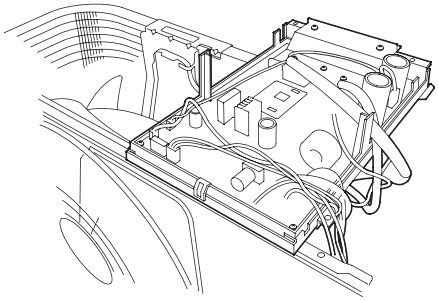

Fig. 9

(8) Remove P.W.B. fixing screws (2 locations) and radiation fin fixing screws (7 locations), and remove the P.W.B. from the support.

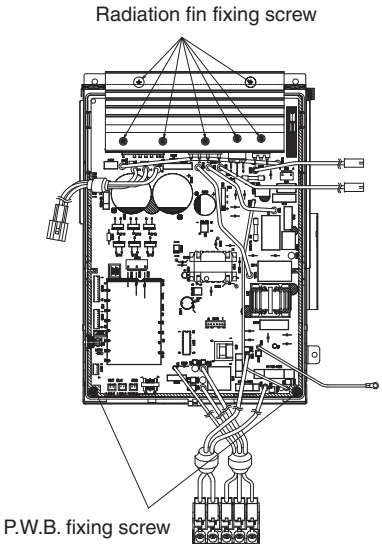

Fig. 10

OUTDOOR UNIT MODEL RAC-50WEC
RAC-20WECI

1. Electrical parts

(1) Remove the service value cover lock screws and lower the cover to remove it.
(2) Remove the top cover lock screw and raise the cover to remove it.

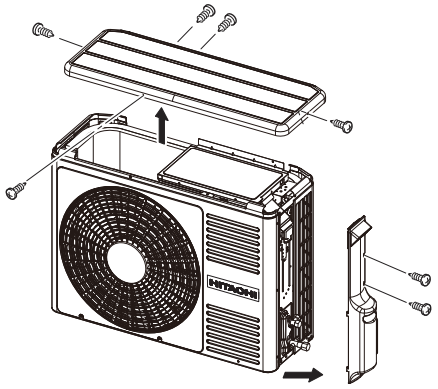

Fig. 11

(3) Remove the front cover lock screw.
(4) Lower the right side of the front cover and pull it forward. Then, remove the cover from the hook.
(5) Pull the right side of the front cover a little and pull up the left side to remove it from the hook.

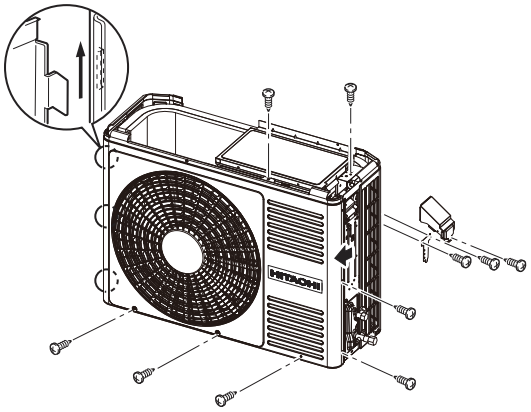

Fig. 12

(6) Remove each connector and earth cable from the lead wire. Then,remove the electrical box.

DESCRIPTION OF MAIN CIRCUIT OPERATION

MODEL RAK-18/25/35/50PEC
RAK-25/35/50PECC
RAK-10/14/20PECI

1. Control power circuit

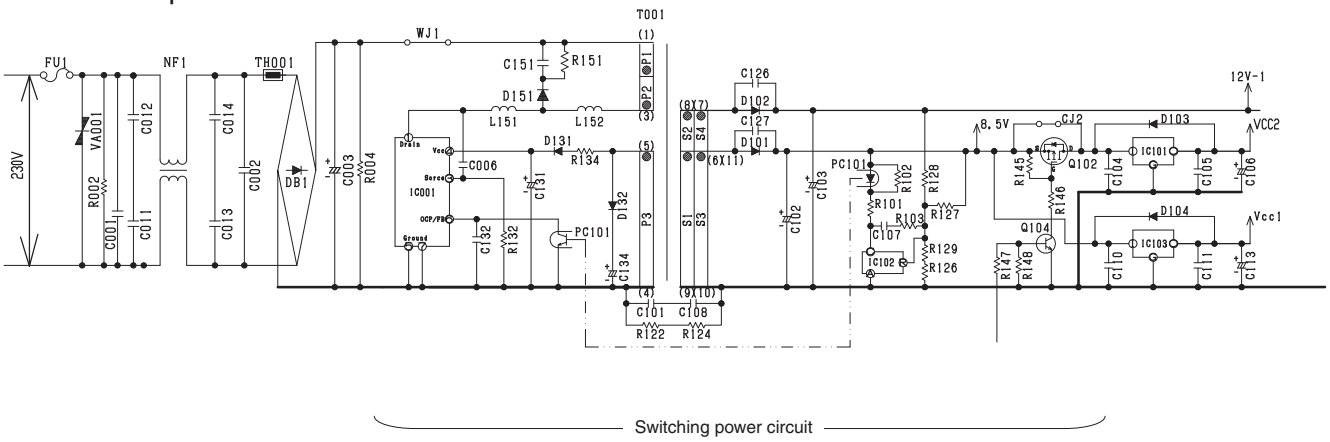

Fig. 1-1

- An AC power supply from outdoor unit passes through the 3.15 A fuse, varistor (VA001), and noise filter circuit and rectified and smoothed by DB1 and C003 to become a DC current 325 V. It is then supplied to indoor fan motor drive circuit,and switching power circuit.
- The switching power circuit, as controlled by IC001, drives the primary winding of the transformer (T001) to produce a specified voltage at the output winding. [The output terminal (pin ①) of IC001 has a switching voltage. But it changes in voltage peak and oscillation period depending on the power load. usually,the oscillation frequency when the air condition operation is about 67 kHz. In the standby state, the oscillation frequency is lowered to a level as low as 20 kHz or so to reduce the standby power.]
- The outputs of the output windings of the transformer is rectified and smoothed to become DC voltages at primary 18.5 V, 12 V, and 8.5 V respectively. The primary 18.5 V is supplied to the drive circuit of the indoor fan motor, the 12 V is supplied to each vane motor and to the drive circuits of the cleaning unit driving motor and other equipment, and the 8.5 V is adjusted to a stable 5 V by the 3-terminal regulator IC (IC101,IC103) and supplied to the microcomputer peripheral circuit.

Check

If a failure in a part or circuit has produced an abnormal current in the power supply, the 3.15 A fuse will melt down to prevent further damage. If the 3.15 A fuse melts down, check the indoor fan motor, switching electrical circuit, and other components and replace any defective part.

Check

If an abnormally high voltage is applied to the power supply, the 3.15 A fuse and varistor (VA001) will prevent further damage. If a high voltage results in the 3.15 A fuse melted down, the varistor (VA001) should have deteriorated and destroyed. Therefore replace it at the same time.

Caution

The primary circuit of the transformer (T001) has a voltage to ground. Guard against electric shocks.

2. Reset Circuit

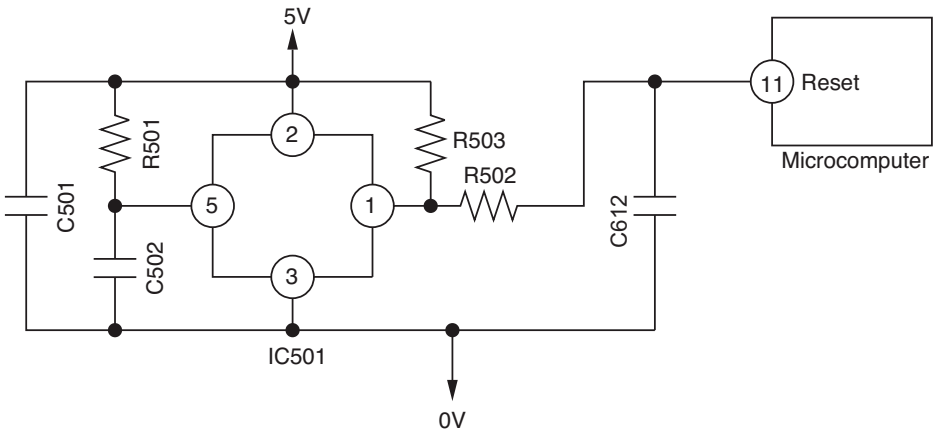

Fig.2-1

Timing chart

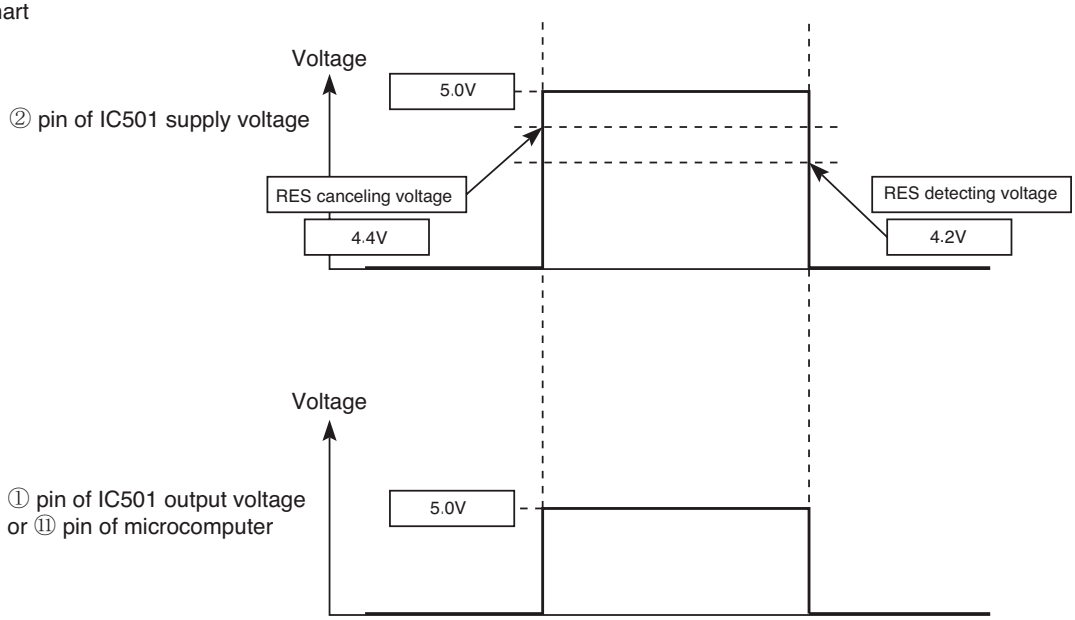

Fig.2-2

- Reset circuit is to initialize the indoor unit microcomputer when switching ON the power or after recovering from power failure.
- Microcomputer operates when ⑪ pin of the indoor unit microcomputer (reset input) is "Lo" for resetting and "Hi" for heating.
- Waveform of each part when switching ON the power and when shutting down is shown in the Fig. 2-2.
- After switching ON the power, ① pin of IC501 supply voltage and ⑪ pin of microcomputer becomes Hi when DC5V line rises and reaches approximately 4.4V or higher.
  Then, resetting will be cancelled and microcomputer starts operating.
- After shutting down the power, ① pin of IC501 supply voltage and ⑪ pin of microcomputer becomes Lo when DC5V line falls and reaches approximately 4.2V or lower.
  Then, the microcomputer will be in reset condition.

3. Drive circuit of the indoor fan motor

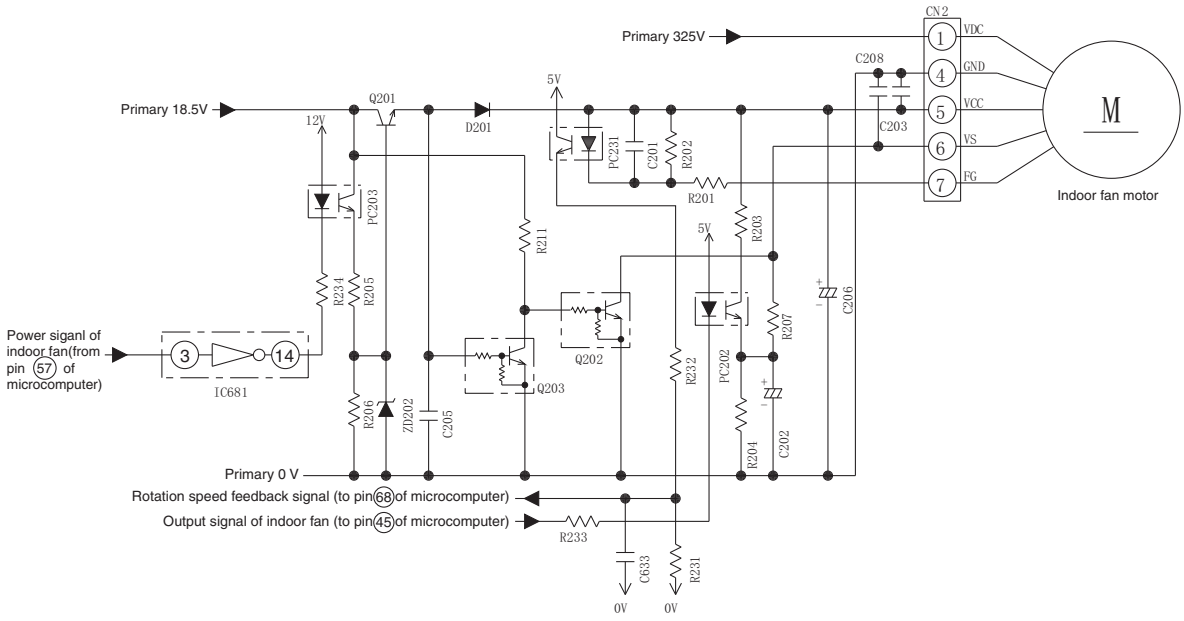

Fig. 3-1

< The circuit check (For test) >

Name	Test point	Test voltage
Motor drive power	CN2 ① pin- ④ pin	About 325V
Motor contorl power	CN2 ⑤ pin- ④ pin	About 15V
Motor speed signal	CN2 ⑥ pin- ④ pin	About 2-6V
Motor rotation speed debug	CN2 ⑦ pin- ④ pin	About 7.5V

* The voltage above is all motor operation vol. when yon start the test, take care of your connector, do not touch the different pin together.
* The voltage of pin ⑥ - pin ④ , pin ⑦ - ④ maybe diffierent from above.

< Pin 6 - Pin 4 voltage one example >

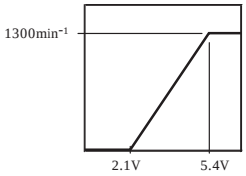

Vsp voltage 「V」

* The different mode maybe have different FAN rotation speed.

< Typical circuit waveform >

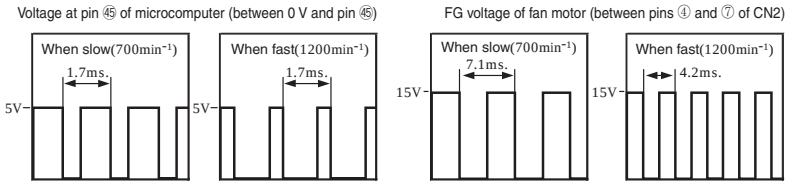

Fig. 3-2

- The indoor fan motor receives VDC (motor drive power supply), VCC (power supply for the control circuit inside the motor), and VS (speed command voltage) from CN2. The indoor fan motor returns an FG signal of a frequency that matches the rotation speed.
- VCC stabilizes the primary 18.5 V power supply into 15 V by using Q201 and supplies it.
- While on standby for a remote control signal, the Q201 shuts down the VCC and reduces the standby power.
- The VS receives a command voltage from the microcomputer (IC601). The VS terminal undergoes an analog voltage that matches the Lo level time ratio of the pulse signal from pin 45 of the microcomputer. (See Fig. 3-2.)
- The FG terminal undergoes a signal of 12 pulses per revolution of the motor shaft. By counting the pulse rate, the microcomputer (IC601) recognizes the motor speed, thereby performing feedback control.

Caution

The indoor fan motor and drive circuit are connected to the primary power supply. They therefore have voltage to ground. Guard against electric shocks.

Caution

While the product is energized, do not under any circumstances detach or reattach a connector. Any such practice would cause a high voltage to run, resulting in the indoor fan motor and board circuit being destroyed. (Check the discharge of the C003 before detaching or reattaching the connectors.)

4. Buzzer Circuit

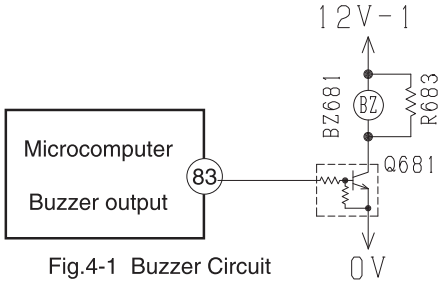

Fig.4-1 Buzzer Circuit

- When the buzzer sounds, an approx. 3.9kHz square signal is output from buzzer output pin 83 of the micro computer. After the amplitude of this signal has been set to 12Vp-p by a transistor, it is applied to the buzzer. The piezoelectric element in the buzzer oscillates to generate the buzzer's sound.

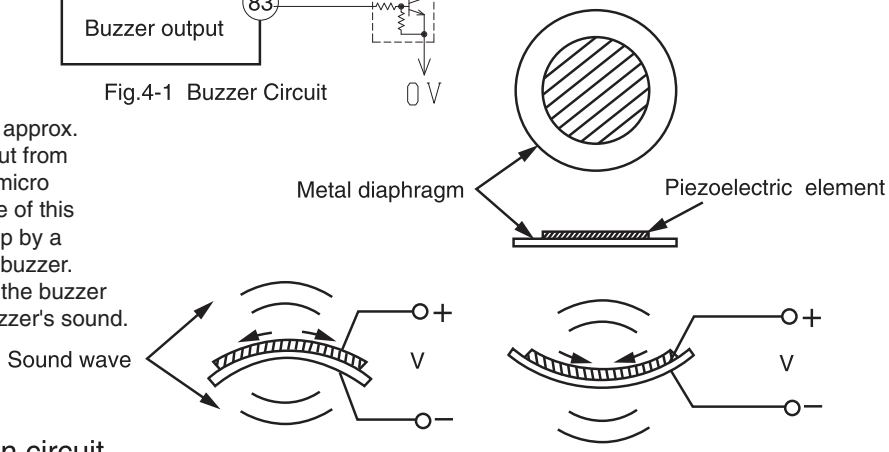

Fig.4-2 Buzzer Operation

5. Remote control reception circuit

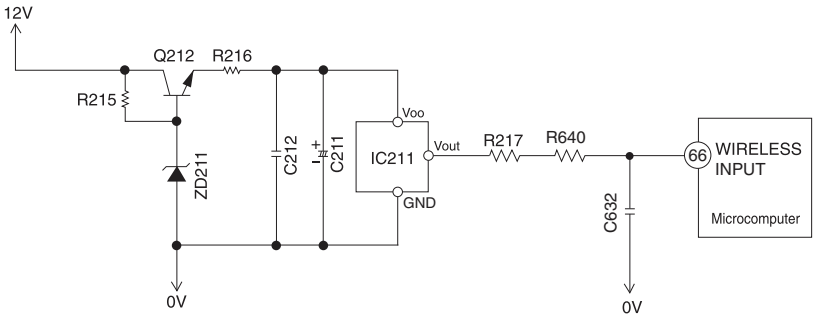

Fig.5-1

[Typical communication waveform]

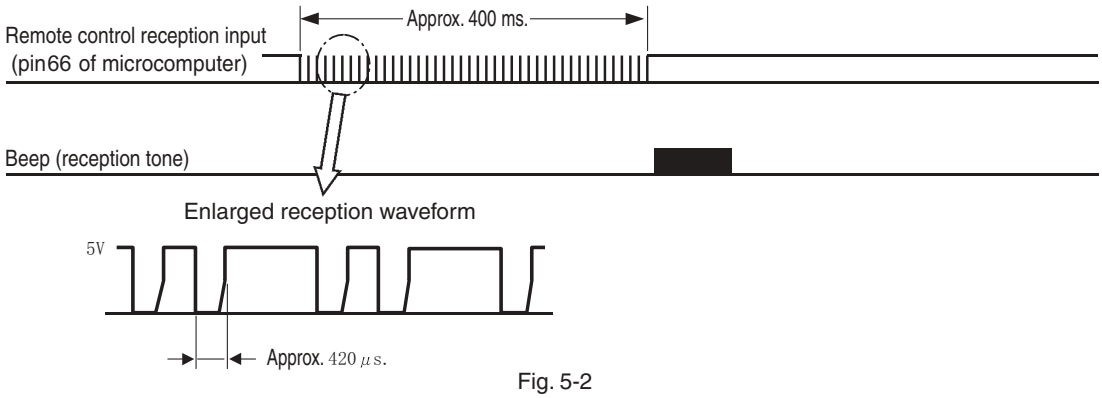

Fig. 5-2

- An infrared signal from the remote control unit is converted to an electrical signal by the remote control light-receiving unit (IC821) and is received by the microcomputer. Data is transmitted as digital data 0 and 1 by changing the interval of the basic pulses at about 420μs.

6. Initial Setting Circuit (IC531)

- When power is supplied, the microcomputer reads the data in IC531 (E^2PROM) and sets the preheating activation value and the rating and maximum speed of the compressor, etc. to their initial values.
- Data of self-diagnosis mode is stored in IC531; data will not be erased even when power is turned off.

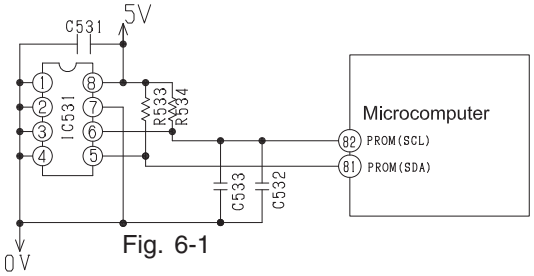

Fig. 6-1

7. Temporary Switch Circuit

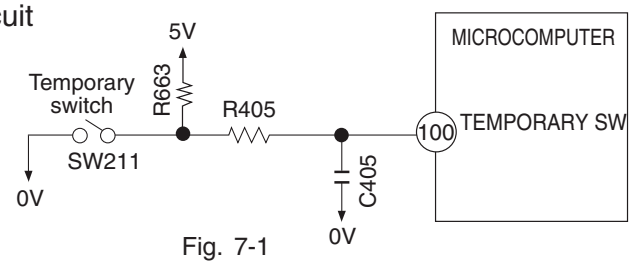

Fig. 7-1

- The temporary switch is used to operate the air conditioner temporarily when the wireless remote control is lost or faulty.
- The air conditioner operates in the previous mode at the previously set temperature. However, when the power switch is set to OFF, it starts automatic operation.

8. Room Temperature Thermistor Circuit

A room temperature thermistor circuit is shown in Fig. 8-1.
According to room temperature, the voltage of point Ⓐ becomes as it is shown in Fig.8-2.

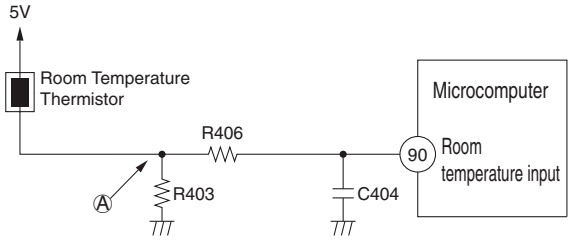

Fig. 8-1

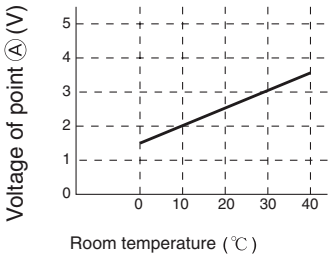

Fig. 8-2

9. Heat Exchanger Thermistor Circuit

Heat exchanger temperature is noticed inside the room
(1) Preheating
(2) Low-temperature defrosts at cooling and dehumidification operation time.
(3) Not working of reversing valve or detection of opening of heat exchange thermistor is controlled.

According to heat exchange temperature, the voltage of point Ⓐ becomes as it is shown in Fig. 9-2.

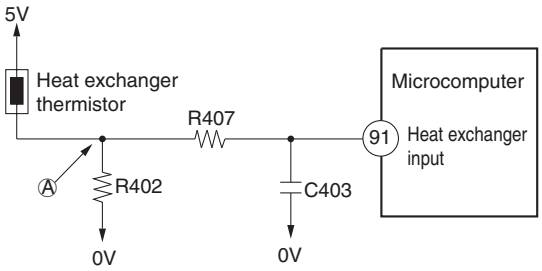

Fig. 9-1

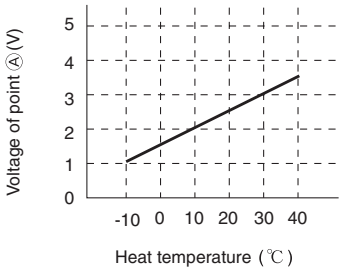

Fig. 9-2

10. Dip-switch

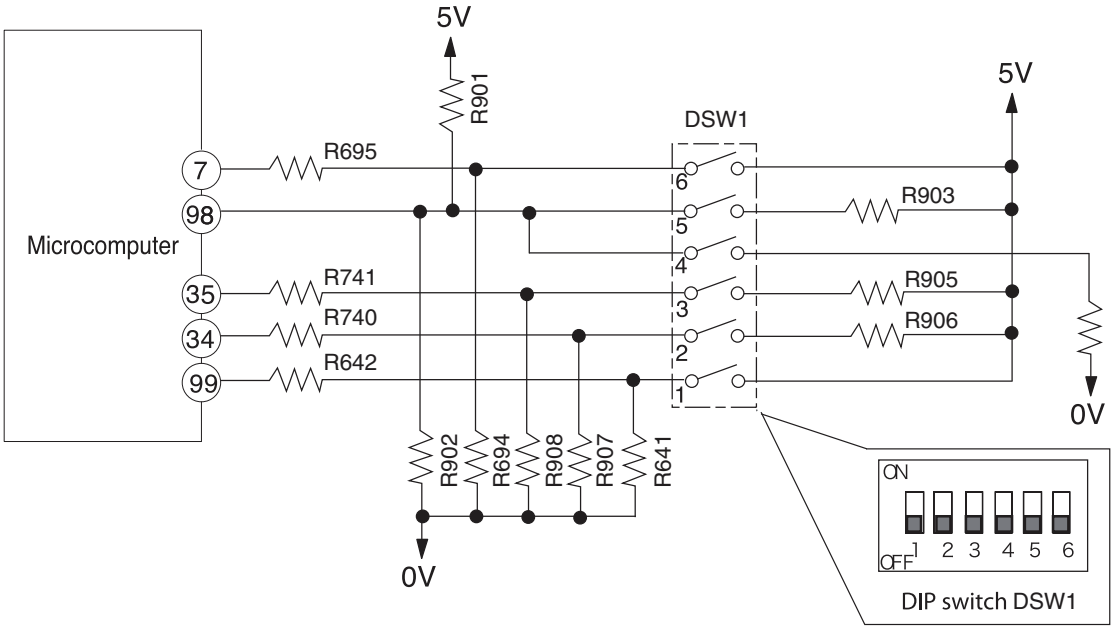

Fig.**10**-1 Dip switch Circuit

- Fig.**10**-1 shows the dip switch circuit; the table shown in Fig.**10**-2 are function and setting position from ①–⑥ of the switch no.

SW No.	I T E M	F U N C T I O N							
1	AUTO RESTART	OFF*	ENABLE	ON	DISABLE				
2	CARD KEY MODE	OFF*	DISABLE	ON	ENABLE				
3	CARD KEY LOGIC SELECT	OFF*	INPUT HIGH ACTIVE	ON	INPUT LOW ACTIVE				
4	HEATING/COOLING ONLY MODE SELECT	OFF*	HEATING & COOLING	OFF	HEATING ONLY	ON	COOLING ONLY	ON	HEATING & COOLING
5	HEATING/COOLING ONLY MODE SELECT	OFF*		ON		OFF		ON	
6	REMOCON ID SELECT	OFF*	SELECT ID : A	ON	SELECT ID : B				

Fig.**10**-2 Functions of Dip switch

NOTE:

* Marking is position of shipping [FACTORY default setting]

11. Indoor/outdoor communication circuits

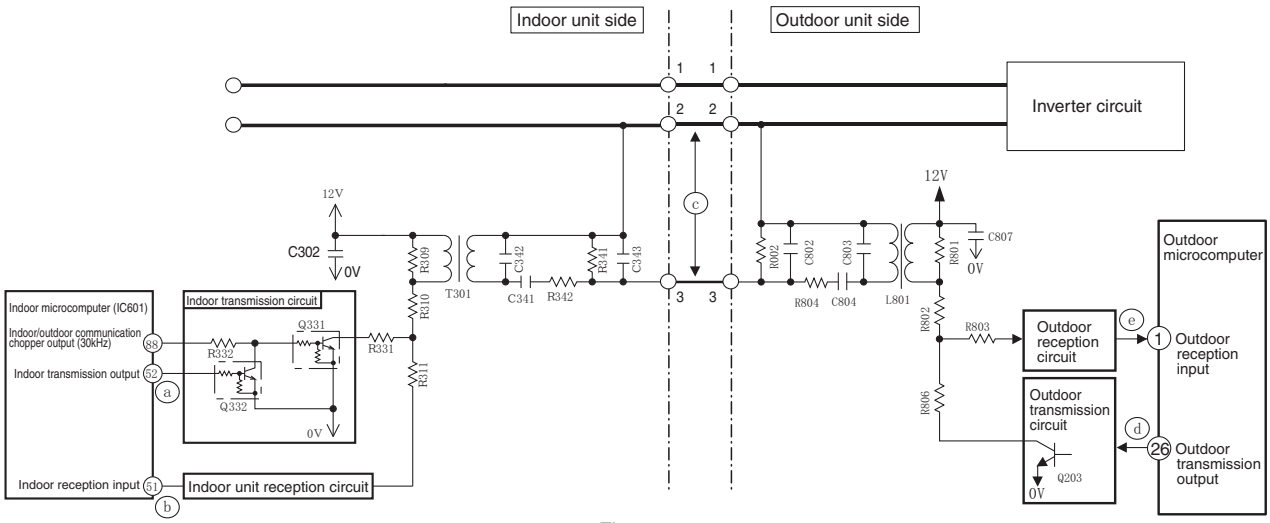

Fig. 11-1

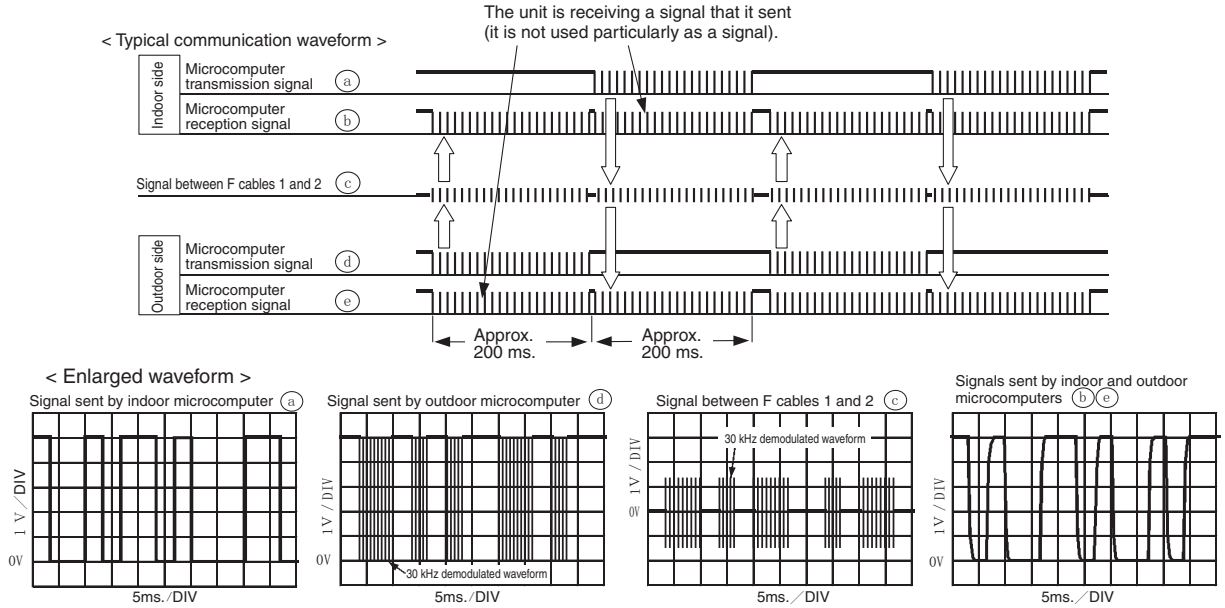

Fig. 11-2

- Indoor and outdoor communications are conducted by using lines 2 and 3 of F cable. Line 2 of F cable is shared with a transmission channel that powers the outdoor unit.
- Data communicated between the indoor and outdoor units are outputted from the microcomputer as serial signals and are transmitted as demodulated by a 30 kHz carrier wave. (Both the indoor and outdoor microcomputers directly output a signal demodulated at 30 kHz.)

Check

If a cable poorly inserted in the indoor terminal board or some other failure overheats the terminal board and the temperature fuse of the terminal board blows out, the power to the indoor communication circuit will be shut down to stop the communications function. (In that case, the failure will be displayed by the timer lamp blinking 3 times.)

Check

If communication fails between the indoor and outdoor units for some reason, the product will give a self-diagnosis display either by "the timer lamp blinking 3 times" or "the timer lamp blinking 12 times" depending on the cause.

12. Stepping motor drive circuit

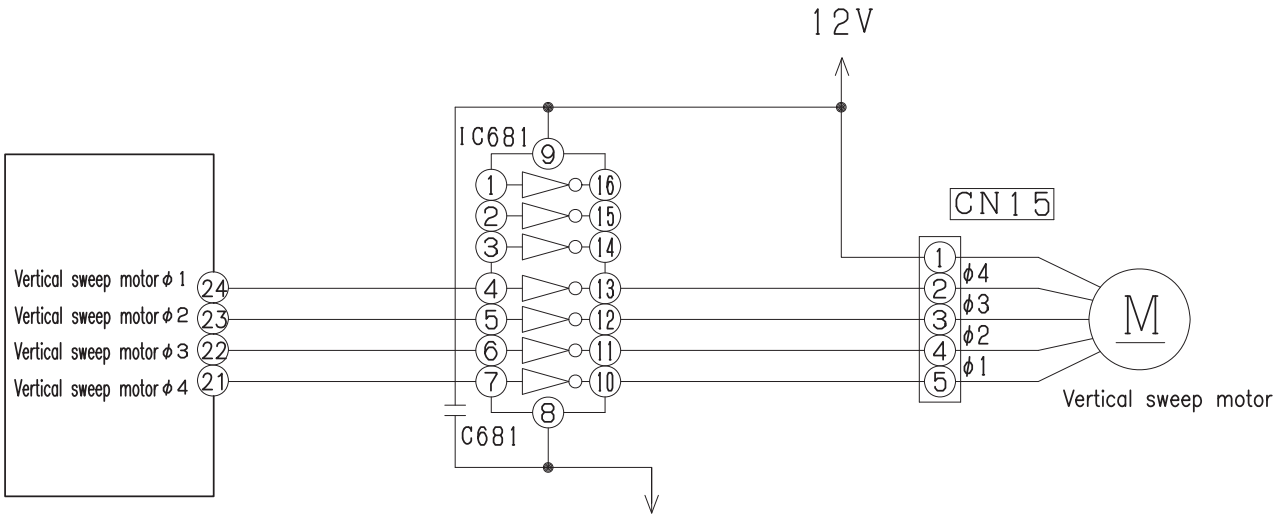

Fig. 12-1

[Connector circuit waveform while the motor runs]
Voltage waveforms of different phases as viewed from the OV line while the motor rotor is turning counterclockwise as viewed from the shaft side

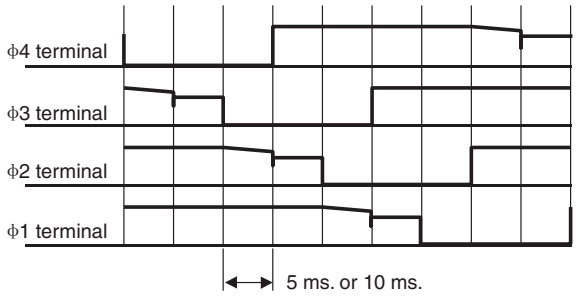

Fig. 12-2

· Each stepping motor runs as excited in 1 or 2 phases at 100 PPS or 200 PPS.
· The excitation pattern passes the microcomputer (IC601) and then the driver IC and excites the coil of each stepping motor.

MODEL RAC-18/25/35WEC
RAC-10/14WECI

1. Power Circuit

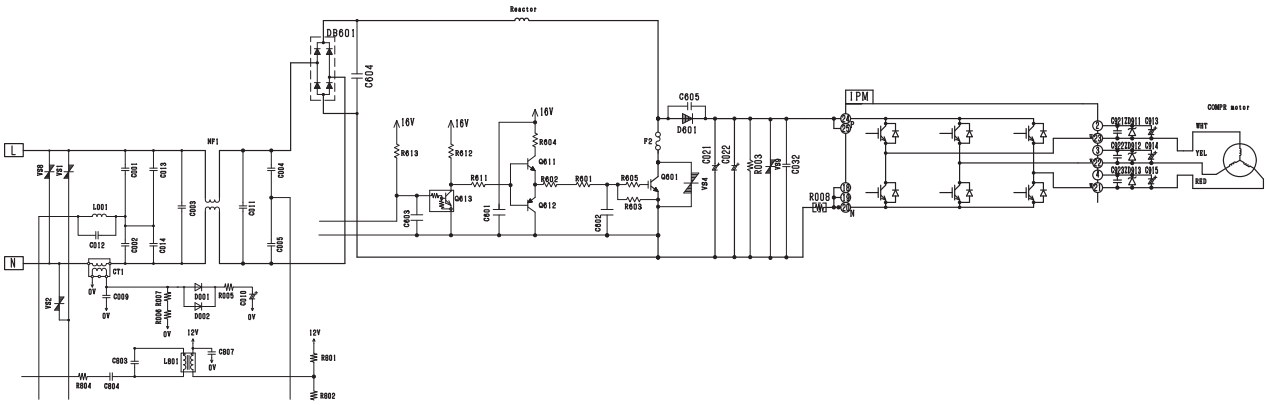

Fig 1-1

※ This circuit full-wave rectifies 230VAC applied between terminals L and N and boosts it to a required voltage with the IPM to create a DC voltage.

The voltage become 300-330V when the compressor is operated.

※ Main parts

（1） Intelligence Power Module (IPM)

A module that constitute by an inverter part.

<Reference>

※ In case of Intelligence Power Module malfunction or connection failure immediately after compressor starts, its may stop due to error of [abnormal low speed], [switching failure],[Ip stop] and others.

（2） Diode Stack（DB601）

These rectify the 230VAC from terminal L and N to a DC power supply.

<Reference>

※ If diode stack (DB601) are faulty, DC voltage may not be generated and the compressor may not operate at all. Also be aware that the 15A fuse might have blown.

（3） Smoothing capacitors (C021-C022,375μF ,420V)

※ This smoothes (averages) the voltage rectified by the diode stack.

（4） IGBT to improve efficiency (Q601)

※ It will improve the efficiency during compressor load become heavy when current flow thru the chopper period of Q601.

2. Power circuit (Low voltage)

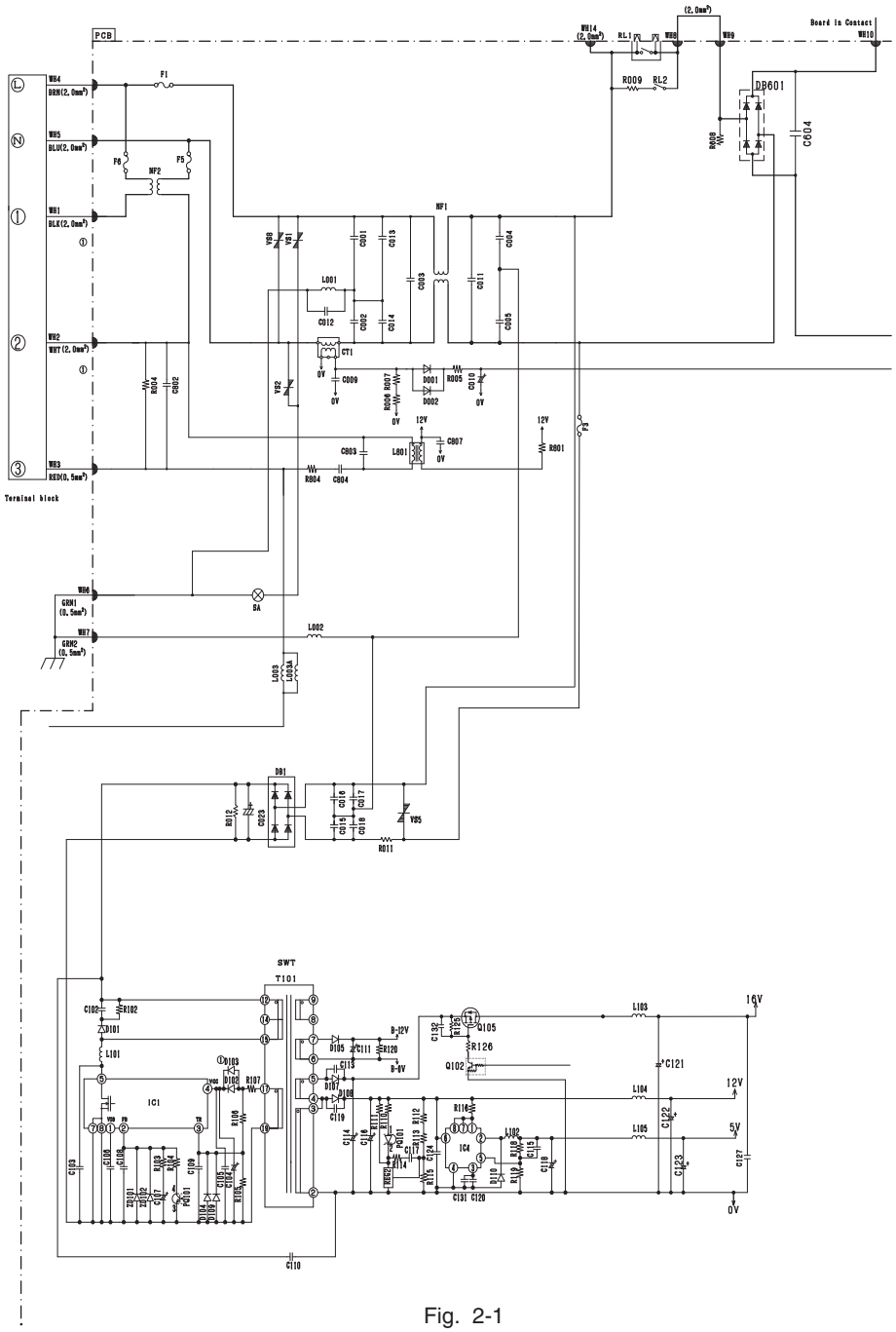

Fig. 2-1

- The 230V AC voltage is rectified to DC voltage (B-12V,16V,12V,5V) pass through switching control IC (ICI), switching transformer.
  (1) B-12V Power supply for electrical expansion valve.
  (2) 16V Power supply for IPM driver circuit of compressor and fan motor, IGBT action.
  (3) 12V Power supply for 4 way valve relay, power relay, inrush current relay,motor current amplification,
  (4) 5V Power supply for microcomputer, peripheral circuits.

Main parts

(1) C001,C002,C003,C004,C005,C011,C013,C014, NF1

These absorb electrical noise generated during operation of compressor and also absorb external noise entering from power line to protect electronic parts.

(2) Surge Absorber, Varistor1,2,5,8.

These absorbs external power surge.

(2) IC4

DC/DC convertor IC (DC12V → DC5V).

3. P.W.B. for power circuit

Voltage specification of power circuit as shown in below table.

〈Checking point〉

Output	Spec	Main load	Measuring point	Example of possible failure mode.
5V O/P	$5^{\pm 0.4}$V	Micon, Thermistor	Tester⊕ : L105 (JUMPER) Tester⊖ : D110 (EARTH)	Outdoor not operate, no blinking indication
12V O/P	$12^{\pm 0.5}$V	Micon, IC2, 3, 4 Relay circuit	Tester⊕ : L104 (JUMPER) Tester⊖ : D110 (EARTH)	Outdoor not operate, no blinking indication
16V O/P	$15.5^{+1.5V}_{-1.0V}$	IPM for Comp IPM for DC fan	Tester⊕ : L103 (JUMPER) Tester⊖ : D110 (EARTH)	Stop : LD301 3, 4 or 12 times blinking
B-12V O/P	$13^{+2.5V}_{-1.0V}$	Expansion valve	Tester⊕ : R120 (B-12V) Tester⊖ : R120 (B-0V)	Stop : LD301 5 times blinking

※ Power circuit for P.W.B can consider normal if the result is satisfied with above specification.

4.Reversing valve control circuit

This model reversing valve control used to control the relay ON/OFF of the revesing valve, and also control the coil of the reversing valve ON/OFF.

The relay ON/OFF has different type when in the different operation mode.

You can see each operation mode as fllows. If the reaversing valve not connected or all the condition not the same as follow, it may be something wrong with the reversing valve circuit.

Point / operation mode		micon ㉘pin - 0V	HIC ㉞ pin - 0V	CN2①- CN2④
Cooling	Usual cooling	Hi	0V	AC230V
Heating	Usual heating	Lo	12V	0V
	Defrost	Hi	0V	AC230V

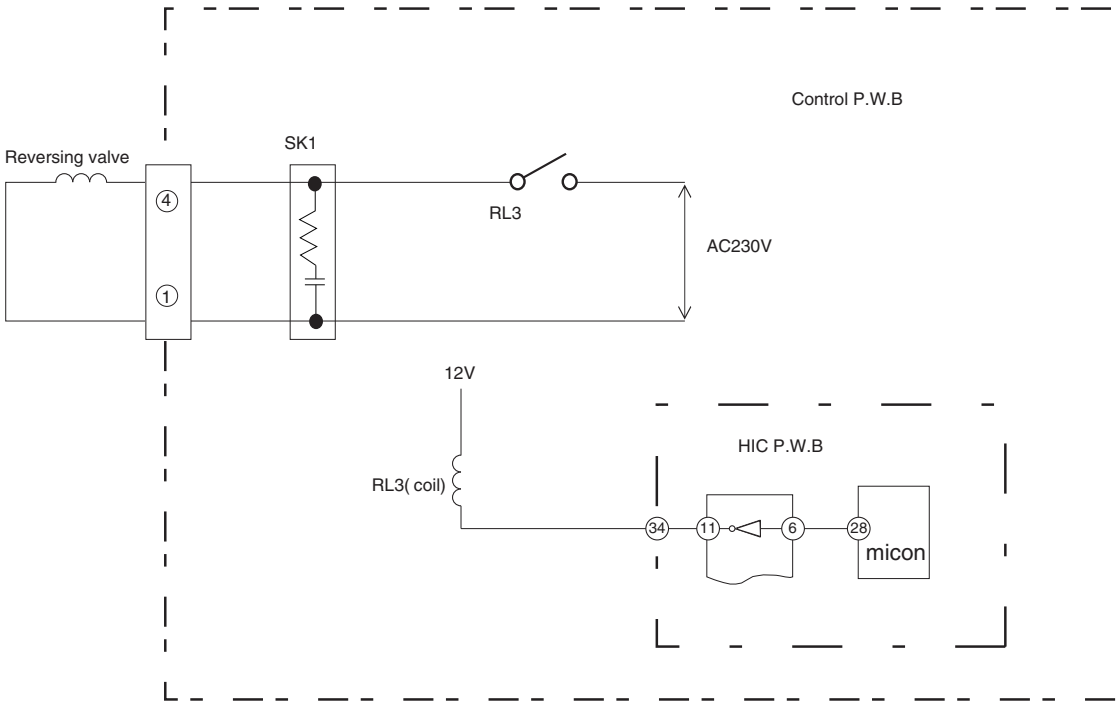

Fig.4-1

5. Temperature Detection Circuit

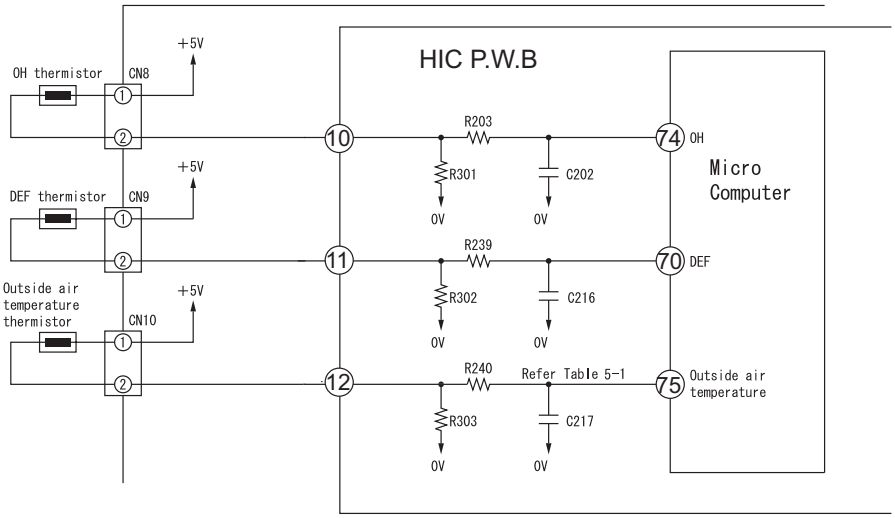

Fig. 5-1

- OH thermistor circuit detect the temperature at the surface of compressor head, DEF thermistor circuit detect the defrosting operation temperature.
- A thermistor is a negative resistor element which has characteristics that the higher(lower) the temperature, the lower(higher) the resistance.
- When the compressor is heated, the resistance of the OH thermistor becomes low and ⊕ 5V is divided by OH thermistor and R301 and the voltage at pin ⑦④ of microcomputer.
- Compare the voltage at microcomputer pin ⑦④ and setting value stored inside. If the value exceed the set value, microcomputer will judge that the compressor is overheated and stop the operation.
- When frost is formed on the outdoor heat exchanger, the temperature at the exchanger drops abruptly. Therefore the resistance of the DEF thermistor becomes high and the voltage at pin ⑦⓪ of micro computer drops. If this voltage becomes lower than the set value stored inside, microcomputer will enter the defrost control.
- During defrost operation, the microcomputer will transfer the defrosting condition command to indoor unit via SDO pin of interface of IF transmission output.
- The microcomputer read the outdoor temperature by Outside Air thermistor and transfer it to the indoor unit, thus controlling the compressor rotation speed according to the set value in the EEPROM of indoor unit and switching the operation mode (outdoor fan on/off etc.) to DRY mode.

  Below table show the typical values of outdoor temperature in relation to the voltage.

Table 5-1

Outside Air Temperature (℃)	−10	0	10	20	30	40
Voltage at both side of R303 (V)	1.19	1.69	2.23	2.75	3.22	3.62

<Reference>

When the thermistor is open, open condition or disconnect, microcomputer pin⑦⓪⑦④⑦⑤are approx. 0V;

When thermistor is shorted, they are approx. 5V and LD301 will blink 7 times.

However, an error is detected when only the OH thermistor is shorted and will enter blinking mode after 12 minutes start the compressor operation.

6. Electric expansion valve circuit

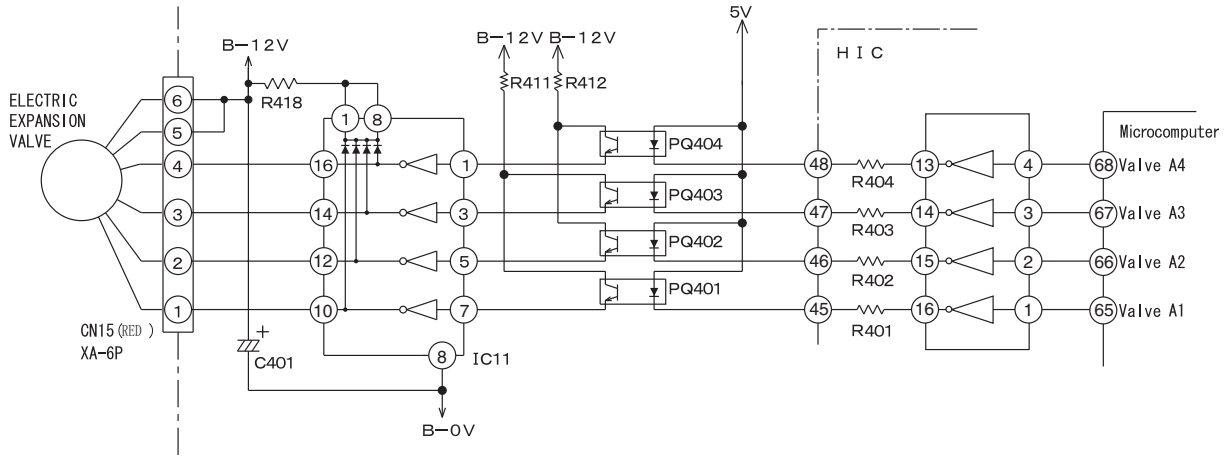

Fig. 6-1

- The electric expansion valve is driven by DC12V. Power is supplied to 1 or 2 phases of 4-phase winding to switch magnetic pole of winding in order to control the opening degree.
- Relationship between power switching direction of phase and open/close direction is shown below. When power is supplied, voltages at pins ④ to ① of CN15 are about 0.9V and 12V when no power is supplied. When power is reset, initial operation is performed for 10 or 20 seconds. During initial operation, measure all voltages at pin ④ to ① of CN15 by using a multimeter. If there is any pin with voltage that has not changed from 0.9V or 12V, expansion valve or microcomputer is broken.
- Fig. 6-2 shows logic waveform when expansion valve is operating.

Table 6-1

CN15 pin no.	Wire	Drive status							
		1	2	3	4	5	6	7	8
①	WHT	ON	ON	OFF	OFF	OFF	OFF	OFF	ON
②	YEL	OFF	ON	ON	ON	OFF	OFF	OFF	OFF
③	ORG	OFF	OFF	OFF	ON	ON	ON	OFF	OFF
④	BLU	OFF	OFF	OFF	OFF	OFF	ON	ON	ON

Operation mode
1→2→3→4→5→6→7→8 VALVE CLOSE
8→7→6→5→4→3→2→1 VALVE OPEN

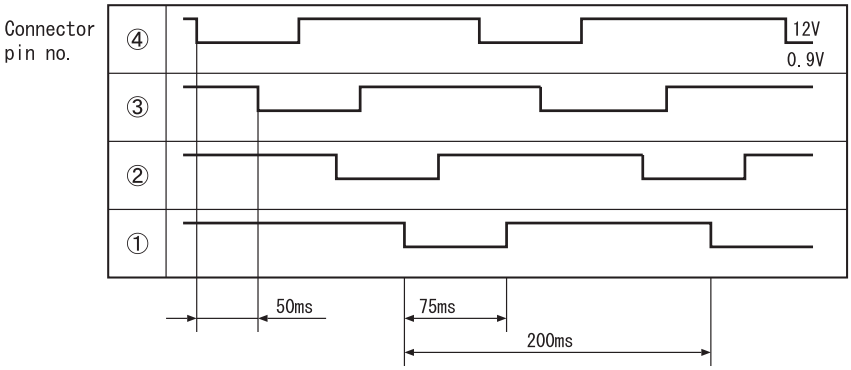

Fig. 6-2

With expansion valve control, opening degree is adjusted to stabilize target temperature by detecting compressor head temperature. The period of control is about once per 20 seconds and output a few pulse.

7. Outdoor DC fan motor control circuit

- This model is built with DC fan motor control circuit inside outdoor electrical unit.

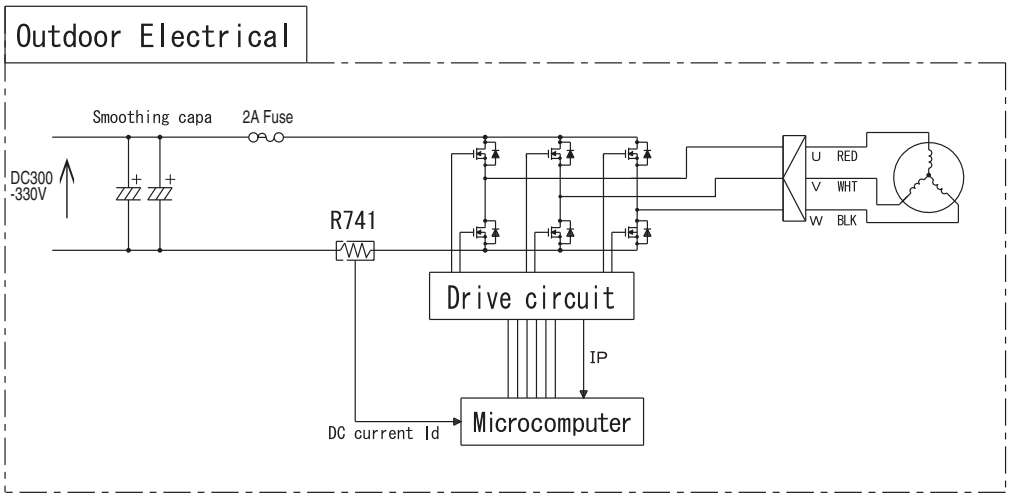

Fig 7-1

This DC fan motor is control by outdoor microcomputer that follow the operating instruction received from indoor microcomputer. The DC current that flow from R741 will presume actual operation speed and control the rotation to follow the operating instruction. Based on this DC current it will detect a over current and other fan motor failure.

(1) Fan motor speed controller during starting

Due to the interference of strong wind etc., operation movement is changed based on fan direction and rotation speed as shown below during starting of operation.

In addition, the fair wind is define as wind that blow to outside direction using Mouth Ring part.

At strong and contrary wind ...The rotational speed is not controlled as to protect the equipment and fan will rotate reversely depend on the wind. Automatically start when wind condition become weak.

At contrary wind ...The rotational speed is controlled in fair wind direction after it slowly reduce the speed and finally stop.

At fair wind ...The rotational speed is controlled as it is.

At strong fair wind ...The rotational speed is not controlled as to protect the equipment and fan will rotate reversely depend on the wind. Automatically start when wind condition become weak.

(2) Fan motor speed controller during unit operating

There is a case where fan rpm is reducing during rotating caused by interference of strong wind

If this condition continue in long period, fan will stop rotating. (LD301 : 11 times blinking)

The unit will restart according to control as per during start (1).

(3) Method of confirming self diagnosis LD301 lamp : 12 times blinking

If the unit stop and LD301 on the pwb blinking 12 times [fan lock stop is detected], follow below steps to confirm it.

1. Fan lock stop is detected when something has disturb the fan rotation by inserting material into propeller fan or ice has growing inside outdoor unit caused by snow.
   Remove it if found something is bloking the fan.
2. Confirmed that CN24 connector is securely inserted. Fan lock stop is detected also when connector is not properly inserted. Please securely insert if found any disconnection.
3. Fan lock stop also can be detected where strong wind blown surrounding the unit.
   Please confirm after restart the unit.(It may take few minutes to operate the compressor)
   It is not a malfunction of electrical unit or fan motor if the unit run continuesly after restart the unit.
4. Check fan motor condition as below procedure.

[Checking Fan Motor] procedure

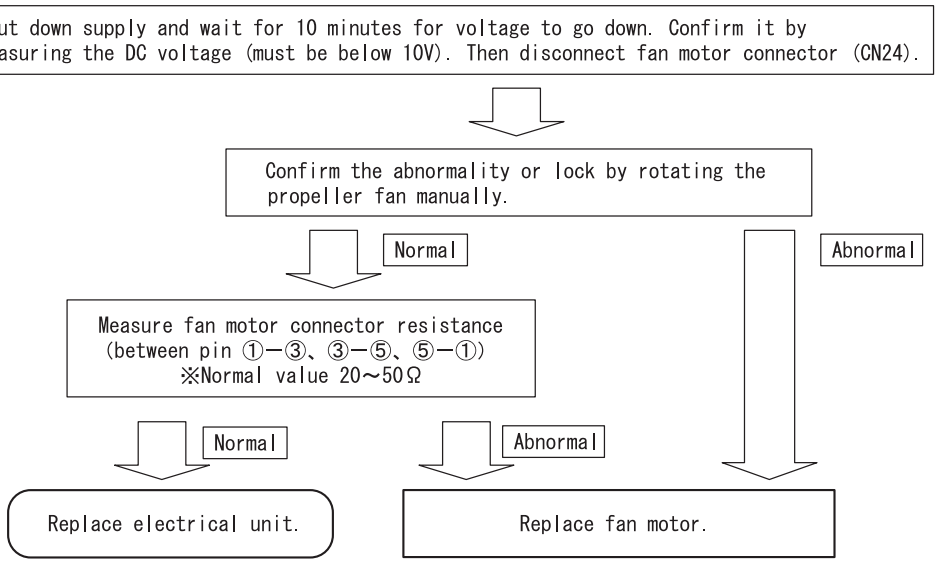

5. Reconnect again fan motor connector (CN24).

※Please confirm above checking procedure if found 2A fuse blown.
If fan motor is broken, replace both electrical unit and fan motor.

Caution

※Beware of electric shock due to high voltage when conducting an operation check.
Power supply for DC fan motor and compressor is common (DC300-330V).

MODEL RAC-50WEC
RAC-20WECI

1. Power Circuit

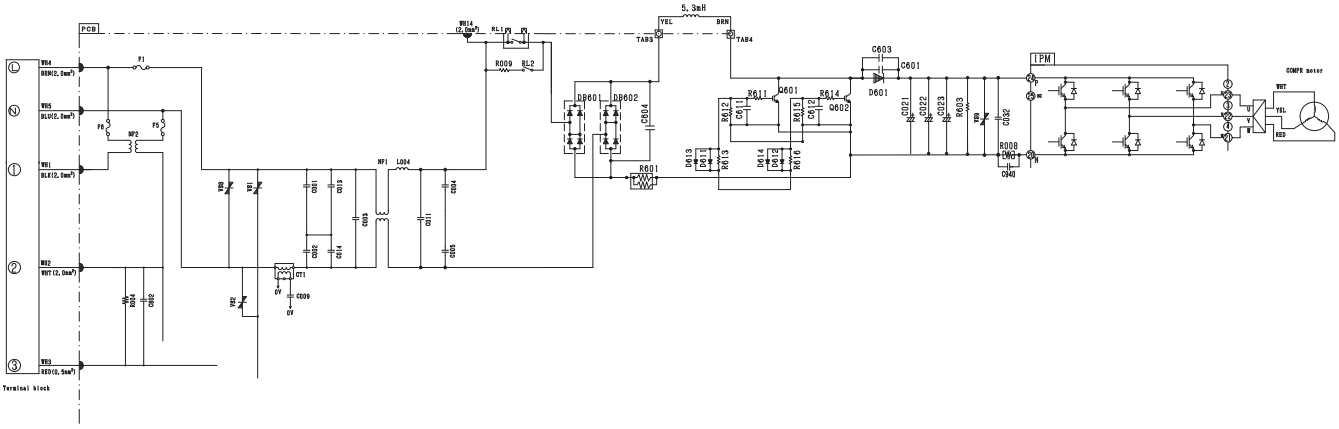

Fig 1-1

※ This circuit full-wave rectifies 230VAC applied between terminals L and N and boosts it to a required voltage with the IPM to create a DC voltage.

The voltage become 300-330V when the compressor is operated.

※ Importance component

（1） Intelligence Power Module (IPM)

A module that constitute by an inverter part.

（2） Diode Stack（DB601, DB602）

These rectify the 230VAC from terminal L and N to a DC power supply.

<Reference>

※ In case of Intelligence Power Module malfunction or connection failure immediately after compressor starts, its may stop due to error of [abnormal low speed], [switching failure],[Ip stop] and others.

<Reference>

※ If diode stack (DB601,DB602) are faulty, DC voltage may not be generated and the compressor may not operate at all. Also be aware that the 25A fuse might have blown.

(3) Smoothing capacitors (C021-C023,500μF,450V)

This smoothes (averages) the voltage rectified by the diode stack.

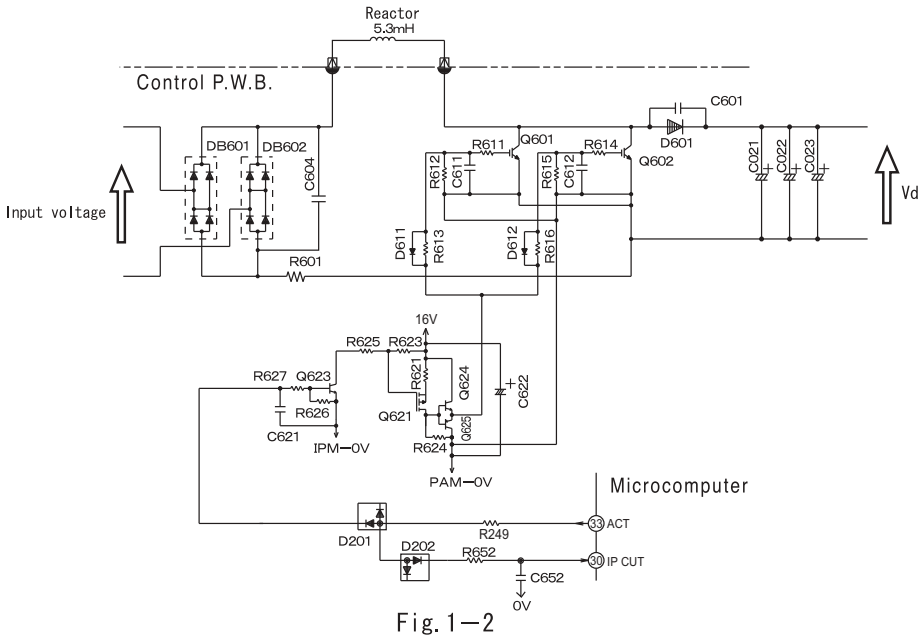

Fig.1—2

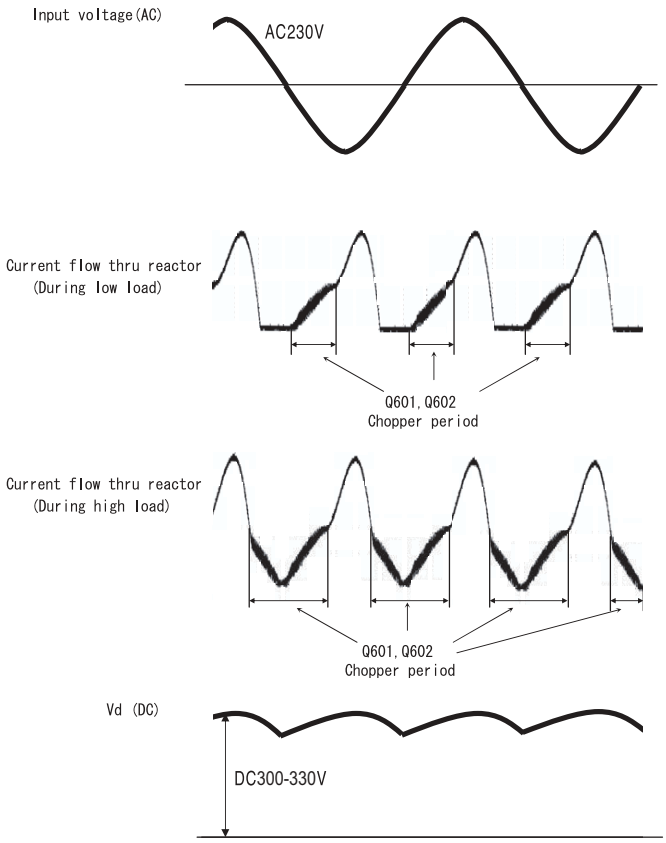

Fig.1—3

(4) IGBT to improve efficiency (Q601,Q602)

It will improve the efficiency during compressor load become heavy when current flow thru the chopper period of Q601,Q602.

2. Power circuit (Low voltage)

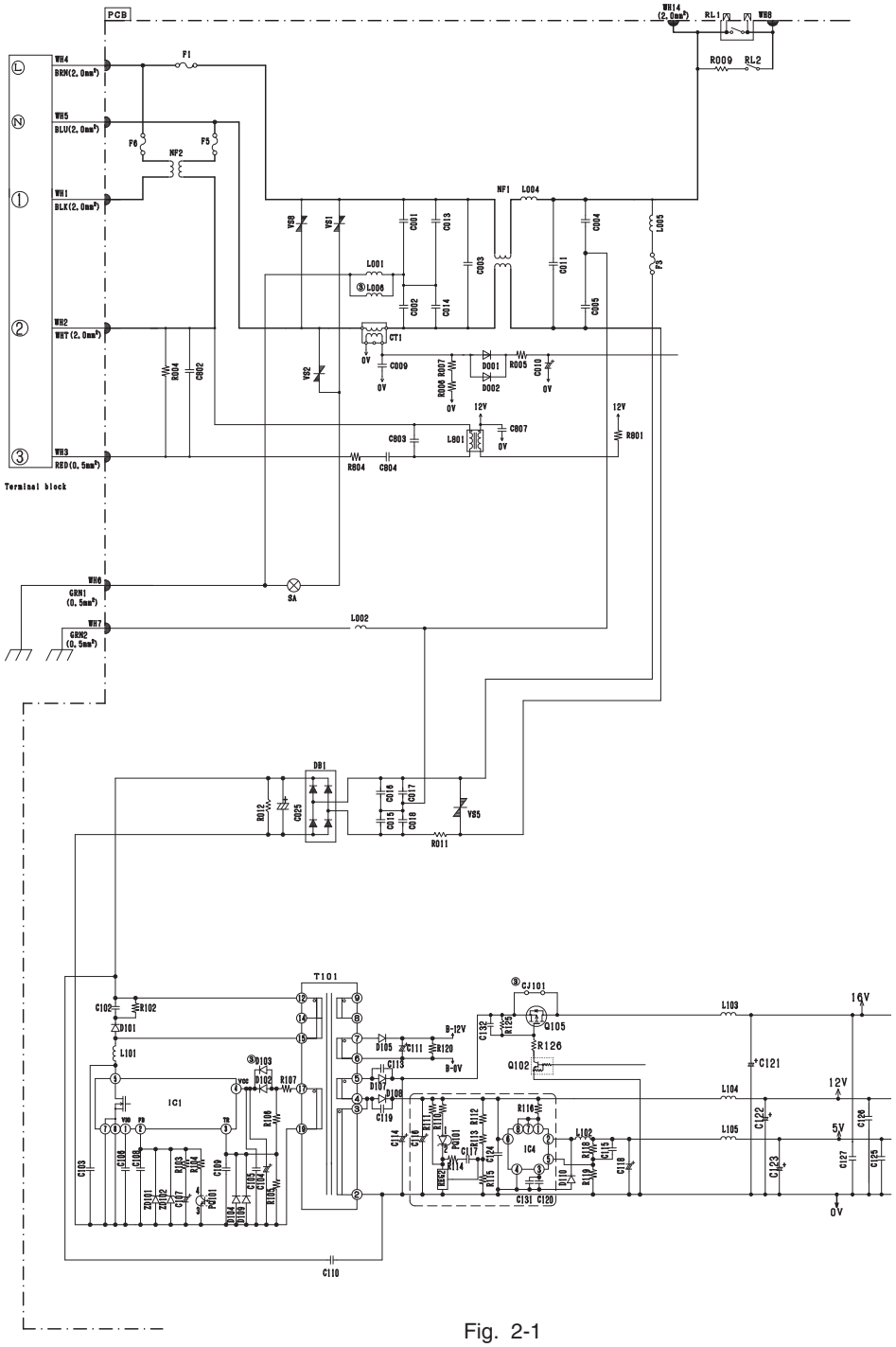

Fig. 2-1

- The 230V AC voltage is rectified to DC voltage (B-12V,16V,12V,5V) pass through switching control IC (ICI), switching transformer.
  (1) B-12V Power supply for electrical expansion valve.
  (2) 16V Power supply for IPM driver circuit of compressor and fan motor, IGBT action.
  (3) 12V Power supply for 4 way valve relay, power relay, inrush current relay,motor current amplification,
  (4) 5V Power supply for microcomputer, peripheral circuits.

Main parts

(1) C001,C002,C003,C004,C005,C011,C013,C014, NF1

These absorb electrical noise generated during operation of compressor and also absorb external noise entering from power line to protect electronic parts.

(2) Surge Absorber, Varistor1,2,5,8.

These absorbs external power surge.

(2) IC4

DC/DC convertor IC (DC12V → DC5V).

3. P.W.B. for power circuit

Voltage specification of power circuit as shown in below table.

〈Checking point〉

Output	Spec	Main load	Measuring point	Example of possible failure mode.
5V O/P	$5^{\pm 0.4}$V	Micon, Thermistor	Tester⊕ : L105 (JUMPER) Tester⊖ : D110 (EARTH)	Outdoor not operate, no blinking indication
12V O/P	$12^{\pm 0.5}$V	Micon, IC2, 3, 4 Relay circuit	Tester⊕ : L104 (JUMPER) Tester⊖ : D110 (EARTH)	Outdoor not operate, no blinking indication
16V O/P	$15.5^{+1.5V}_{-1.0V}$	IPM for Comp IPM for DC fan	Tester⊕ : L103 (JUMPER) Tester⊖ : D110 (EARTH)	Stop : LD301 3, 4 or 12 times blinking
B-12V O/P	$13^{+2.5V}_{-1.0V}$	Expansion valve	Tester⊕ : R418 (B-12V) Tester⊖ : C401 ("-")	Stop : LD301 5 times blinking

※ Power circuit for P.W.B can consider normal if the result is satisfied with above specification.

4.Reversing valve control circuit

This model reversing valve control used to control the relay ON/OFF of the revesing valve, and also control the coil of the reversing valve ON/OFF.

The relay ON/OFF has different type when in the different operation mode.

You can see each operation mode as fllows. If the reaversing valve not connected or all the condition not the same as follow, it may be something wrong with the reversing valve circuit.

Point / operation mode		micon ㉘pin - 0V	HIC ㉘ pin - 0V	CN2①- CN2④
Cooling	Usual cooling	Hi	0V	AC230V
Heating	Usual heating	Lo	12V	0V
	Defrost	Hi	0V	AC230V

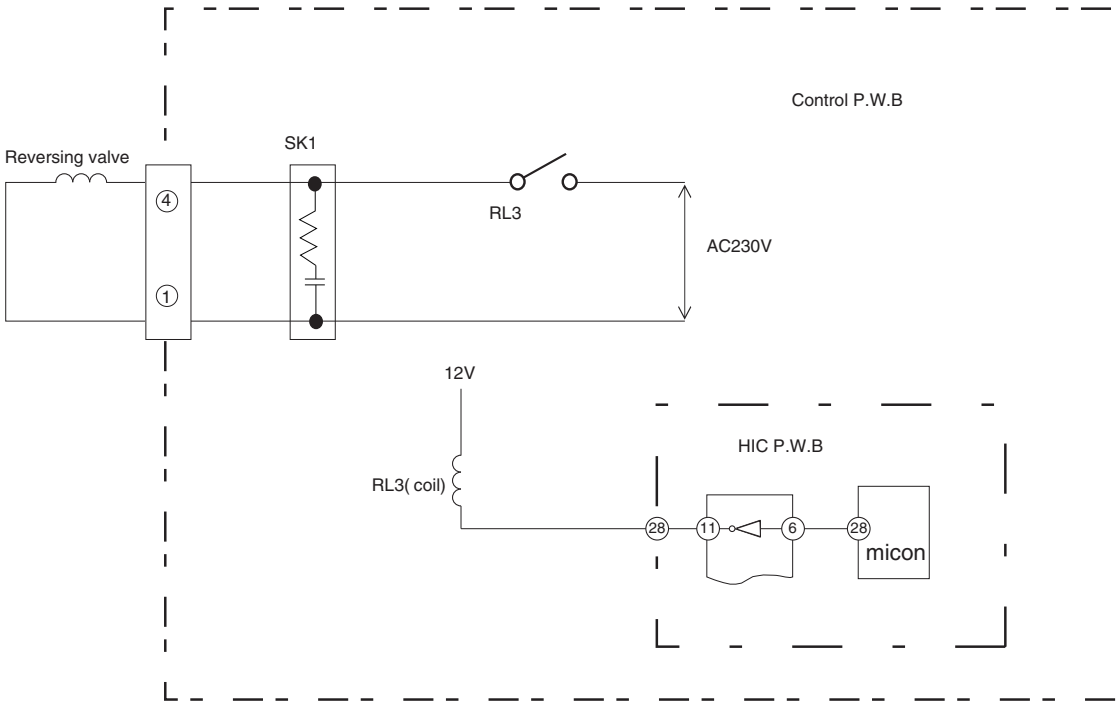

Fig.4-1

5. Temperature Detection Circuit

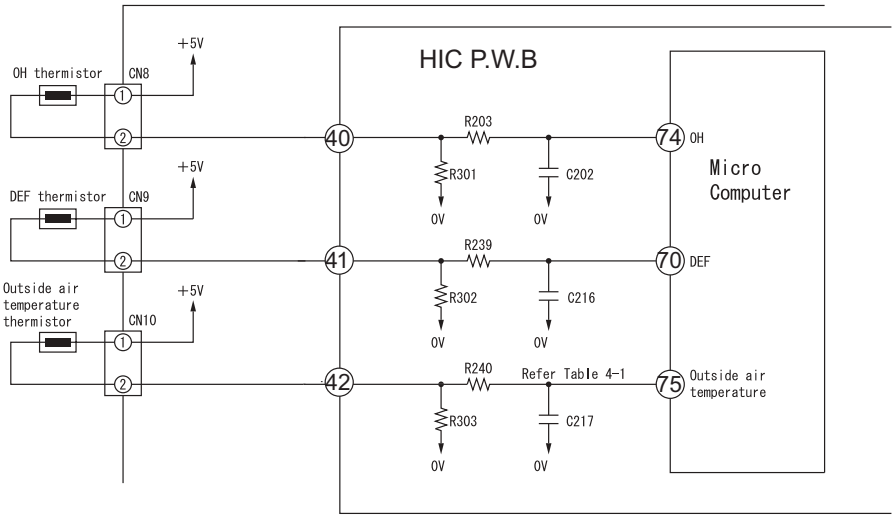

Fig. 5-1

- OH thermistor circuit detect the temperature at the surface of compressor head, DEF thermistor circuit detect the defrosting operation temperature.
- A thermistor is a negative resistor element which has characteristics that the higher(lower) the temperature, the lower(higher) the resistance.
- When the compressor is heated, the resistance of the OH thermistor becomes low and ⊕ 5V is divided by OH thermistor and R301 and the voltage at pin 74 of microcomputer.
- Compare the voltage at microcomputer pin 74 and setting value stored inside. If the value exceed the set value, microcomputer will judge that the compressor is overheated and stop the operation.
- When frost is formed on the outdoor heat exchanger, the temperature at the exchanger drops abruptly. Therefore the resistance of the DEF thermistor becomes high and the voltage at pin 70 of micro computer drops. If this voltage becomes lower than the set value stored inside, microcomputer will enter the defrost control.
- During defrost operation, the microcomputer will transfer the defrosting condition command to indoor unit via SDO pin of interface of IF transmission output.
- The microcomputer read the outdoor temperature by Outside Air thermistor and transfer it to the indoor unit, thus controlling the compressor rotation speed according to the set value in the EEPROM of indoor unit and switching the operation mode (outdoor fan on/off etc.) to DRY mode.
  Below table show the typical values of outdoor temperature in relation to the voltage.

Table 5-1

Outside Air Temperature (℃)	−10	0	10	20	30	40
Voltage at both side of R303 (V)	1.19	1.69	2.23	2.75	3.22	3.62

<Reference>

When the thermistor is open, open condition or disconnect, microcomputer pin 70 74 75 are approx. 0V;

When thermistor is shorted, they are approx. 5V and LD301 will blink 7 times.

However, an error is detected when only the OH thermistor is shorted and will enter blinking mode after 12 minutes start the compressor operation.

6. Electric expansion valve circuit

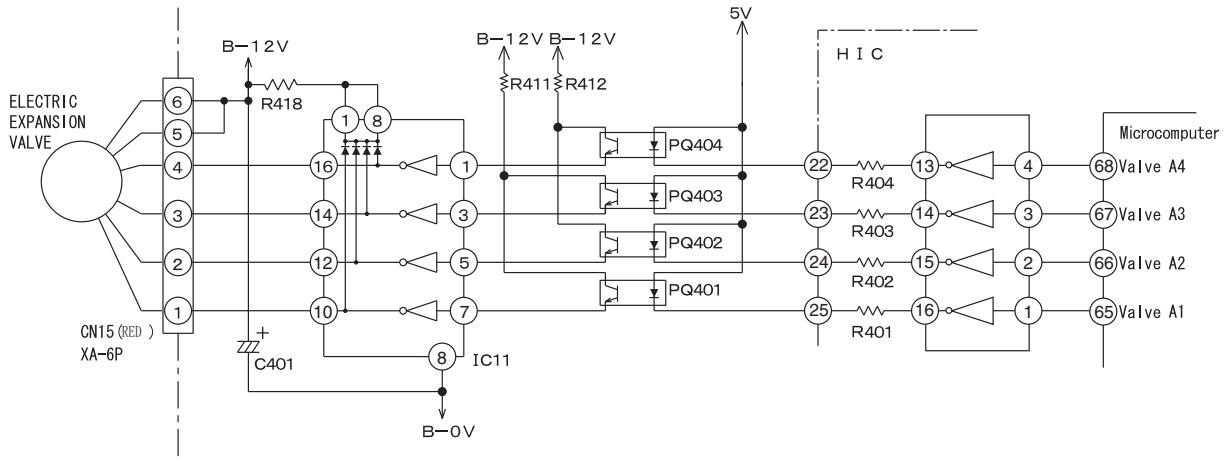

Fig. 6-1

- The electric expansion valve is driven by DC12V. Power is supplied to 1 or 2 phases of 4-phase winding to switch magnetic pole of winding in order to control the opening degree.
- Relationship between power switching direction of phase and open/close direction is shown below. When power is supplied, voltages at pins ④ to ① of CN15 are about 0.9V and 12V when no power is supplied. When power is reset, initial operation is performed for 10 or 20 seconds. During initial operation, measure all voltages at pin ④ to ① of CN15 by using a multimeter. If there is any pin with voltage that has not changed from 0.9V or 12V, expansion valve or microcomputer is broken.
- Fig. 6-2 shows logic waveform when expansion valve is operating.

Table 6-1

CN15 pin no.	Wire	Drive status							
		1	2	3	4	5	6	7	8
①	WHT	ON	ON	OFF	OFF	OFF	OFF	OFF	ON
②	YEL	OFF	ON	ON	ON	OFF	OFF	OFF	OFF
③	ORG	OFF	OFF	OFF	ON	ON	ON	OFF	OFF
④	BLU	OFF	OFF	OFF	OFF	OFF	ON	ON	ON

Operation mode
1→2→3→4→5→6→7→8 VALVE CLOSE
8→7→6→5→4→3→2→1 VALVE OPEN

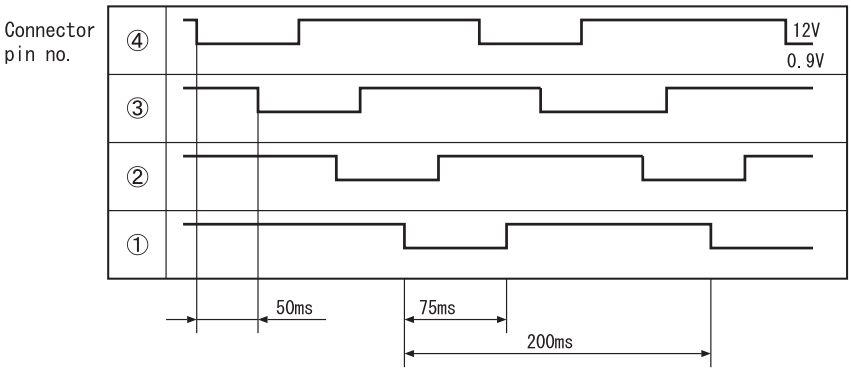

Fig. 6-2

With expansion valve control, opening degree is adjusted to stabilize target temperature by detecting compressor head temperature. The period of control is about once per 20 seconds and output a few pulse.

7. Outdoor DC fan motor control circuit

- This model is built with DC fan motor control circuit inside outdoor electrical unit.

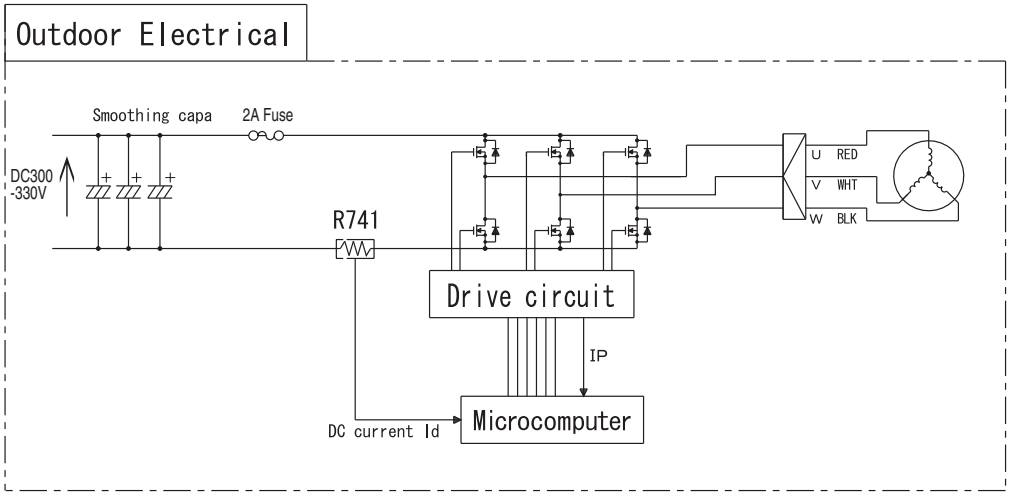

Fig 7-1

This DC fan motor is control by outdoor microcomputer that follow the operating instruction received from indoor microcomputer. The DC current that flow from R741 will presume actual operation speed and control the rotation to follow the operating instruction. Based on this DC current it will detect a over current and other fan motor failure.

(1) Fan motor speed controller during starting

Due to the interference of strong wind etc., operation movement is changed based on fan direction and rotation speed as shown below during starting of operation.

In addition, the fair wind is define as wind that blow to outside direction using Mouth Ring part.

At strong and contrary wind ...The rotational speed is not controlled as to protect the equipment and fan will rotate reversely depend on the wind. Automatically start when wind condition become weak.

At contrary wind ...The rotational speed is controlled in fair wind direction after it slowly reduce the speed and finally stop.

At fair wind ...The rotational speed is controlled as it is.

At strong fair wind ...The rotational speed is not controlled as to protect the equipment and fan will rotate reversely depend on the wind. Automatically start when wind condition become weak.

(2) Fan motor speed controller during unit operating

There is a case where fan rpm is reducing during rotating caused by interference of strong wind If this condition continue in long period, fan will stop rotating. (LD301 : 11 times blinking)

The unit will restart according to control as per during start (1).

(3) Method of confirming self diagnosis LD301 lamp : 12 times blinking

If the unit stop and LD301 on the pwb blinking 12 times [fan lock stop is detected], follow below steps to confirm it.

1. Fan lock stop is detected when something has disturb the fan rotation by inserting material into propeller fan or ice has growing inside outdoor unit caused by snow.
   Remove it if found something is bloking the fan.
2. Confirmed that CN24 connector is securely inserted. Fan lock stop is detected also when connector is not properly inserted. Please securely insert if found any disconnection.
3. Fan lock stop also can be detected where strong wind blown surrounding the unit.
   Please confirm after restart the unit.(It may take few minutes to operate the compressor)
   It is not a malfunction of electrical unit or fan motor if the unit run continuesly after restart the unit.
4. Check fan motor condition as below procedure.

[Checking Fan Motor] procedure

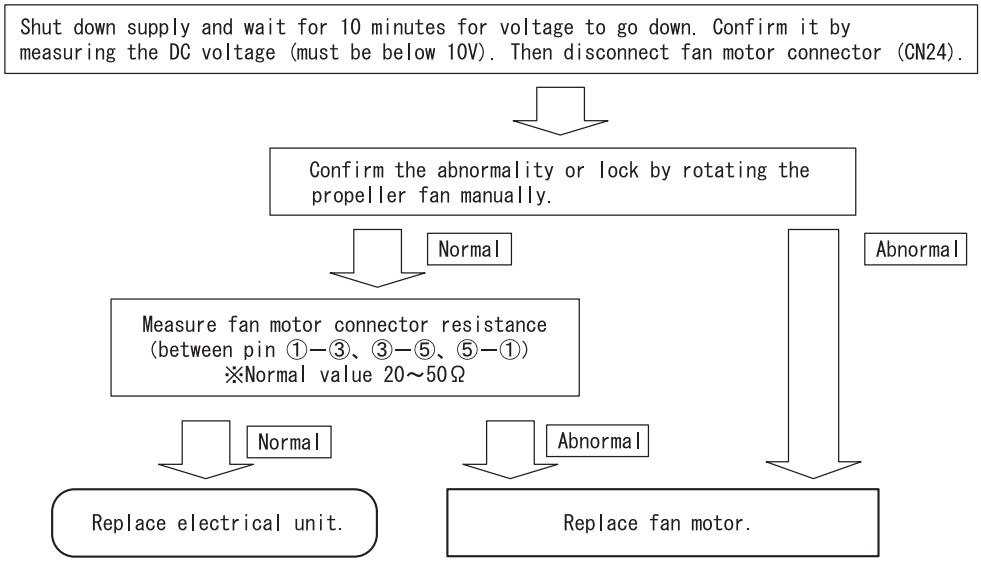

5. Reconnect again fan motor connector (CN24).

※Please confirm above checking procedure if found 2A fuse blown.
If fan motor is broken, replace both electrical unit and fan motor.

Caution

※Beware of electric shock due to high voltage when conducting an operation check.
Power supply for DC fan motor and compressor is common (DC300-330V).

SERVICE CALL Q&A

Cooling operation

Q1 The compressor sometimes stops during cooling.

A1 Check if the heat exchanger of the indoor unit is covered with frost. Wait for 3 to 4 minutes until the frost disappears.

Cooling when the room temperature is low may cause the heat exchanger of the indoor unit to gather frost.

Dehumidification

Q1 The indoor unit produces a noise that goes "shaaahhh" during dehumidification.

A1 That is a noise produced by refrigerant flowing through the pipe.

Q2 Cold air comes out during a dehumidifying operation.

A2 To improve the dehumidification efficiency performs quiet fan operation. Therefore the air is cold and it is not a malfunction.

Q3 The operation does not stop even by setting the temperature higher than room temperature on the remote controller.

A3 It sets to perform dehumidifying operation by setting the temperature slightly lower than remote controller setting.

Heating operation

Q1 The product sometimes fails to produce a wind during heating.

A1 Defrosting is in progress. Wait 5 to 10 minutes until the frost on the outdoor unit disappears.

Q2 The product begins with a slight fan speed during heating even though set to "Hi fan" or "Med fan" or "Low fan" or "silent fan".

A2 At the first of the heating, the product will run for 30 seconds with a slight fan speed. When set to strong fan speed, the product will begin with a slight fan speed operation, producing a weak fan speed for 30 seconds, and then switch to strong fan speed.

Q3 The product stops during heating even though it is set to "30℃."

A3 When heating is conducted despite the high outdoor temperature, the product may stop to protect its equipment.

Auto-fresh defrost

Q1 During heating, I turned off the product by using the START/STOP button. But the "operation lamp" is blinking and the outdoor unit is running.

A1 The "auto-fresh defrost" should be working. When stopped, the product will check its outdoor unit for frost and, if there is any frost, conduct defrosting and then stop operating.

Common, etc.

Q1 In "automatic fan speed" mode, the indoor fan changes from strong fan speed to weak fan speed to slight fan speed.

A1 This does not abnormal. It is because the cold fan speed prevention is working.

In fan speed "automatic" mode, the product will sense the heat exchange temperature and, when the temperature goes down, the product will automatically switch to strong wind to weak fan speed to slight fan speed.

Q2 At operation startup, the outdoor unit becomes noisy.

A2 At operation startup, the product will set the rotation speed of the compressor to full power and increase its heating and cooling capacity, resulting in a slightly higher noise level. This is not a sign of a breakdown.

Q3 The outdoor unit sometimes changes in its noise.

A3 The difference between the thermometer temperature setting and room temperature will change the rotation speed of the compressor. This is not a sign of a breakdown.

Q4 There is a difference between the temperature setting and room temperature in room temperature control.

A4 The room structure, air stream, or other factor may cause a gap between the room temperature setting and actual room temperature. If there is any difference between the setting and the room temperature, adjust the temperature setting to match the living space to a comfortable temperature.

Q5 The product will not produce wind right after startup.

A5 After turning ON the power switch or breaker, setting the product to heating or dehumidification will activate a preliminary operation for 1 minute. At that time, heating will cause the operation lamp to blink. This is not a sign of a breakdown.

Q6 I performed internal cleaning, but didn't succeed in controlling the mold in the room.

A6 Internal cleaning will clean the inside of the indoor unit of the air-conditioner, thereby controlling mold generation. This will not control the mold in the room.

Wireless remote control

Q1 The timer will not become set.

A1 Have you set the product to the current time? The timer cannot be set unless it is set to the current time.

Q2 The current time display will disappear at once.

A2 The current time disappears 10 seconds later. The timer set display is given priority.

When set to the current time setting, the reading blinks for about 3 minutes.

Q3 I made a timer "reservation". But the time setting has disappeared.

A3 Is the time not past the reserved time?
The set time disappears when the current time reaches the reserved time.

Q4 I tried to set the "sleep" timer while the ON timer is reserved. But it will not set itself to a desired time.

A4 The time set in the "sleep" timer can be set with a time up to the time set with the ON timer. If the end time of the "sleep" timer is past the time set with the ON timer, you cannot make that setting.

Q5 I set the "sleep" timer during operation.But
①the indoor fan will not run (it will not produce wind)
②wind intensity will not change.

A5 ①This occurs when the room temperature and humidity have reached their settings during dehumidification and the air-conditioner is in a pause. The product will begin again to run within about 3 minutes.
②The product will run with the wind speed set to a "quiet" state.

Q6 I tried to change the setting with the "room temperature" button of the remote control unit in vain.

A6 You cannot make this setting when the product is in "air purification" mode. Moreover, you cannot set the product to a desired setting when quick laundry or dew control is being performed with the "auto" or "quick dehumidification" button.

Q7 The temperature setting field on the remote control unit displays
+ / ℃ or - / ℃.

A7 The product will give a display when you operate the product in "auto" using the operation switch button. This can be controlled
within the range of ±3 ℃.
The product will display + / ℃ if the temperature is / ℃ higher than the room temperature in automatic setting.
The product will display - / ℃ if the temperature is / ℃ lower than the room temperature in automatic setting.

Q8 The remote control unit will give no display in response to a push of the "vertical vane" button.

A8 The remote control unit displays nothing.

TROUBLE SHOOTING

MODEL RAC-18/25/35/50WEC
RAC-10/14/20WECI

Inspection instructions

Warning

Note that the 0 V line of the outdoor electrical parts and the primary power circuit of the indoor electrical parts have voltages to ground as illustrated in the right-hand figure.

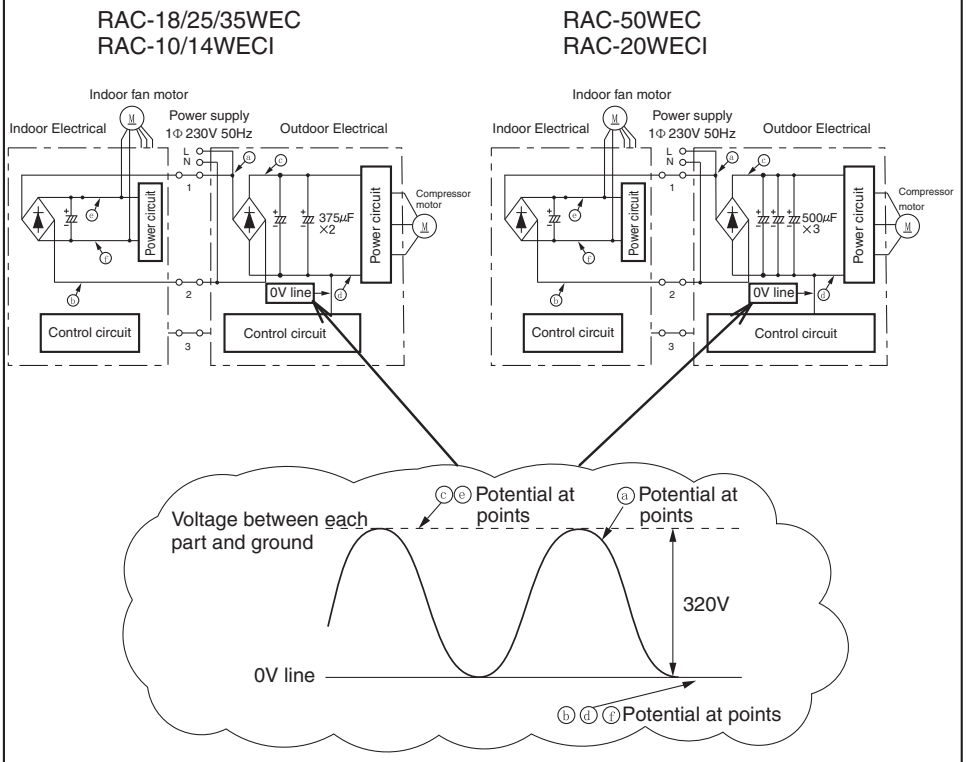

Warning

When conducting a check with an oscilloscope or something similar, do not ground the oscilloscope. Note that the oscilloscope will be subjected to voltages as illustrated in the figure above.

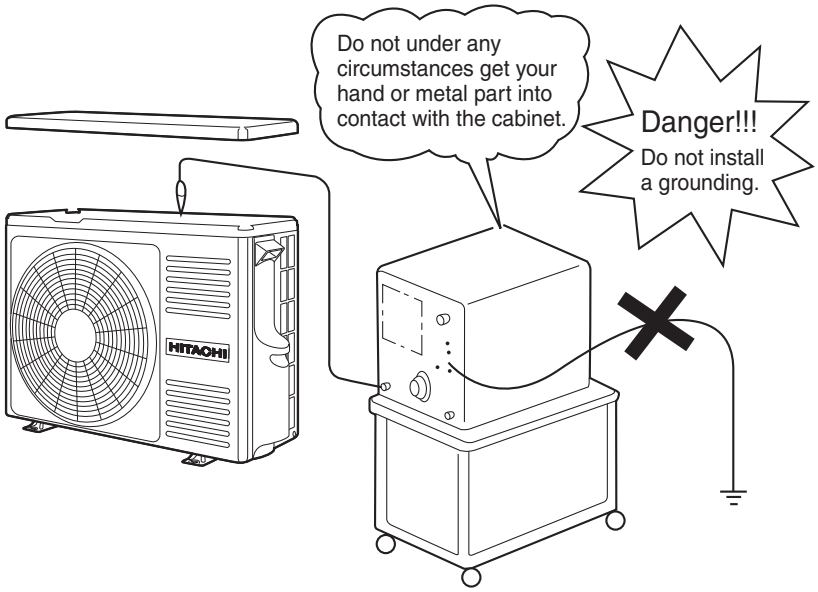

DISCHARGE, PROCEDURE AND POWER SHUT OFF METHOD FOR POWER CIRCUIT

WARNING

Caution

- Voltage of about 350 V is charged between the terminal of smoothing capacitors.
- During continuity check for each circuit part of the outdoor unit, be sure to discharge the smoothing capacitors.

Discharge Procedure

1. Turn off the power.
2. After power is turned off, wait for 10 minutes or more. Then, remove electrical parts cover and apply soldering iron of 30 to 75 W for 15 seconds or more to IPM(24) and IPM(20) terminals on the main P.W.B. as shown in the figure below, in order to discharge voltage in smoothing capacitor.

Do not use a soldering iron with transformer: Otherwise, thermal fuse inside transformer will be blown.

RAC-18/25/35WEC
RAC-10/14WECI

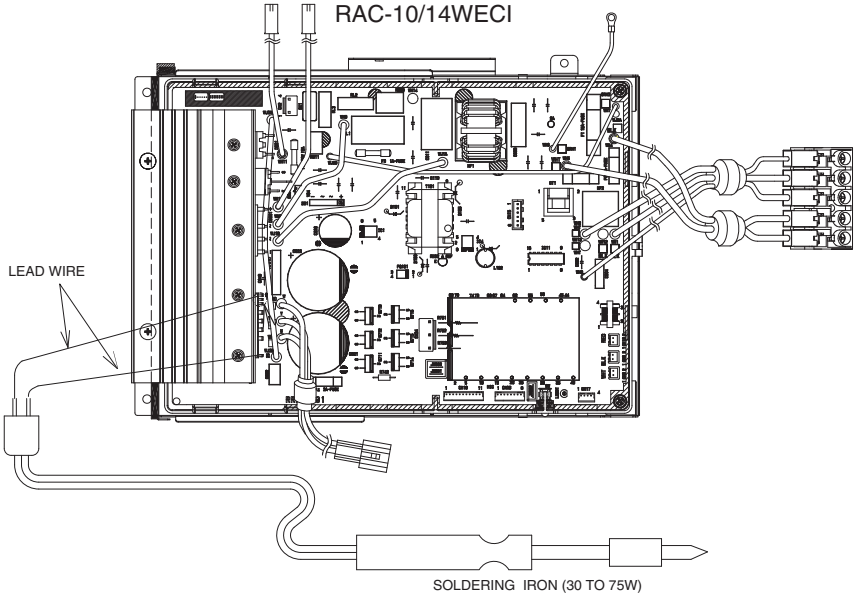

RAC-50WEC
RAC-20WECI

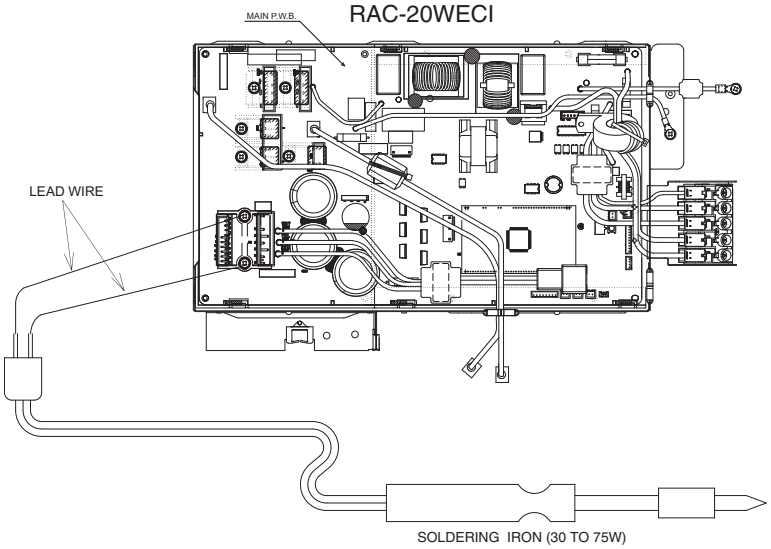

STRUCTURE OF AN INDOOR UNIT ELECTRIC PARTS
RAK-18/25/35/50PEC
RAK-25/35/50PECC
RAK-10/14/20PECI

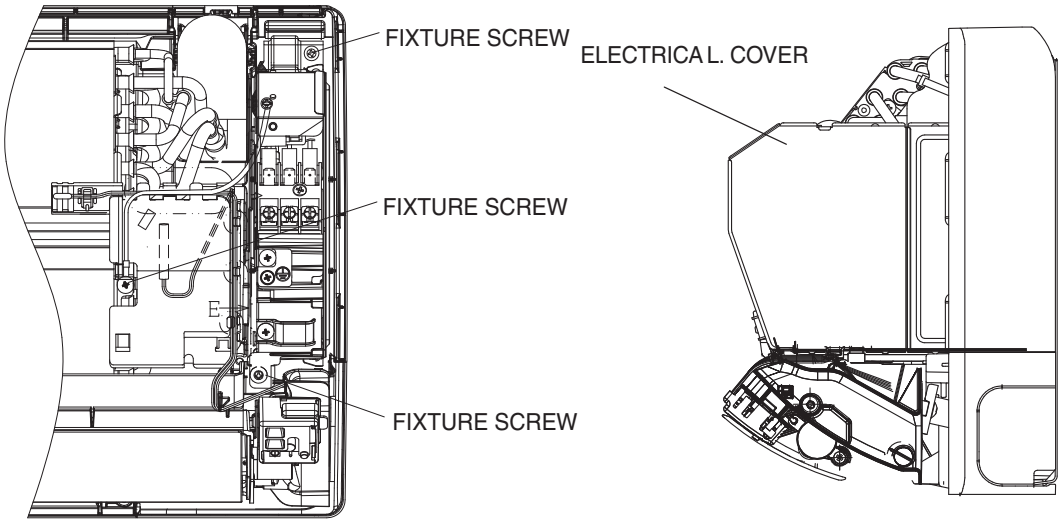

Removing electrical parts

1. Remove the electrical parts cover.
2. Remove the connectors from the CN4 (heat exchange thermistor), CN15 (stepping motor) and CN2 (fan motor).
3. Remove three lock screws.

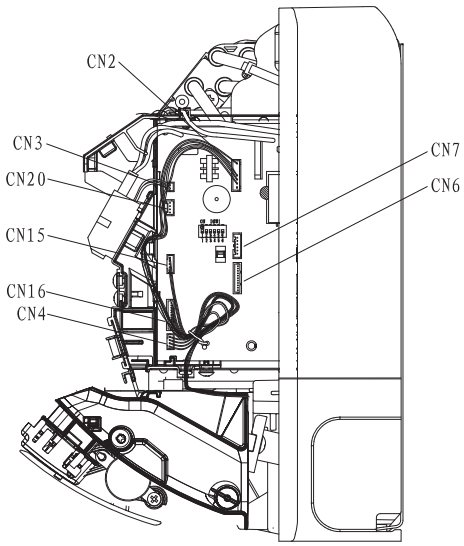

Removing control P.W.B.

1. Remove the connectors from the CN3.
2. Remove the P.W.B. from the P.W.B. support.

Removing the indicating P.W.B.

1. Remove the connector from the CN16 on the control P.W.B.
2. Remove the upper hook from the indicating P.W.B. lock resin, pull the P.W.B. forward a little and remove it.

Other instructions

(1) Detaching and reattaching the receptacles for tab terminal

All the receptacles for connecting tab terminals are with a locking mechanism. Forcibly pulling any such receptacle without unlocking it will destroy it. Be on guard.
When reconnecting it, insert it securely all the way home.

· Receptacle types and how to unlock them

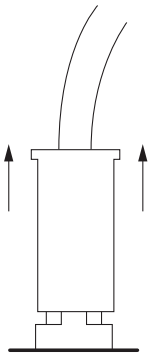

Vertical (with a resin case)

Hold the resin case and pull it out.

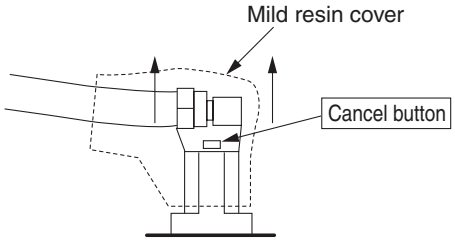

Horizontal (with a mild resin cover)

Hold the cancel button down on the mild resin cover while pulling it out.

(2) Detaching and reattaching the board connector

The product comes equipped with many board connectors provided with lock mechanism. Forcibly pulling any such part without unlocking it will destroy it. Be on guard. When reconnecting it, insert it securely all the way home.

Pinch the locking mechanism with your fingers and pull it out unlocked.

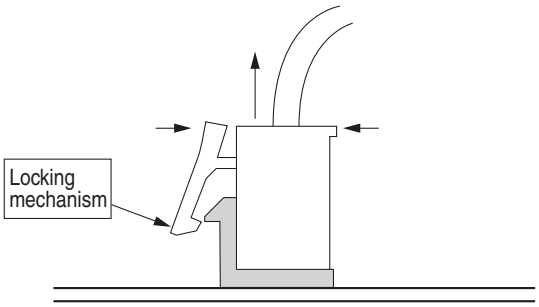

(3) Do not detach or reattach the connectors while energized

Do not under any circumstances detach or reattach the connectors while energized. That would destroy the board components and fan motor. For both the indoor and outdoor boards, ensure that the smoothing capacitor has discharged its electricity fully before you do your work.

№	Function	Description
1	Self-diagnosis display [Display on the indoor unit side]	· The failure mode detected on the indoor unit side is displayed by blinking the "timer lamp". And a failure detected on the outdoor unit side will be indicated by the "time lamp" blinking 4 times. · If the outdoor unit side detects a failure, the product will first conduct several operation retrials. There are some failure modes with no lamp display while retrials are continued. [Failure mode where retrials are continued and the indoor unit lamp does not end up giving a display] OH thermistor heat-up Overload lower limit cut Low-frequency things
	[Display on the outdoor unit side]	· The failure mode detected on the outdoor unit side is displayed by blinking the "LD301". Detecting a failure will stop the outdoor unit and keep blinking the LD301 until it is restarted. (The communication error will persist until the communication is reestablished.)
2	Self-diagnosis memory	· The failure modes detected on the indoor and outdoor unit sides are stored in the nonvolatile memory of the indoor unit and can be read later on. (The memory will remain even after power-off.) · The failure modes detected on the outdoor unit side are written in memory every time any such mode occurs. The failure mode can therefore be detected on the indoor unit side without waiting for the retry frequency to reach the display of the indoor unit lamp. Moreover, the normal self-diagnosis display function which rarely occurs will store and display failure modes that do not end up displaying the indoor unit lamp. (Any such mode may be unable to be stored if indoor or outdoor communications is in a failure.) · The product stores 5 last-stored failure modes. · There is a function for deleting memory. Once you clear the memory and run the product for several days, you can read the failure modes and check them, thereby detecting the less frequent failure phenomena. · Failure modes can be checked by both the blinking of the lamp of the indoor unit and the display of the remote control liquid crystal display.

※The "self-diagnosis function of the communication circuit" available in our conventional models is now incorporated as part of the normal self-diagnosis function. In the case of a failure in the communication circuit, you do not have to conduct a special operation and the operations can be automatically divided into 3 blinking operations and 12 blinking operations of the timer lamp. However, a strong external noise may have resulted in 12 times of blinking.

Self-diagnosis display function (indoor side display)

While the "timer lamp" (orange), of the indoor unit is blinking, troubleshoot the product while referring to the table below.

1. How to count the lamp blinking frequency
   - The product will repeat blinking with 2-second intermissions.
   - The blinking speed is as follows: on for 0.35 seconds and off for 0.35 seconds.

[An example of 5-time blinking]

2. If you wish to try another operation while the lamp is blinking, operate the START/STOP button on the remote control unit twice. The first push will reset the indoor microcomputer, while the second will activate the product

DESCRIPTION OF THE SELF-DIAGNOSIS INDICATION

REFER TO THE TABLE BELOW IF THE TIMER INDICATOR(ORANGE) IS BLINKING.

LAMP BLINKING MODE		MAIN DEFECTIVE
2 sec ———	ONCE	REFRIGERANT CYCLE DEFECTIVE
2 sec ———	2 TIMES	FORCED COOLING OPERATION
2 sec ———	3 TIMES	INTERFACE DEFECTIVE(INDOOR)
2 sec ———	4 TIMES	OUTDOOR UNIT DEFECTIVE
2 sec —	9 TIMES	INDOOR THERMISTOR DEFECTIVE
2 sec —	10 TIMES	ABNORMAL ROTATING NUMBERS OF DC FAN MOTOR
2 sec —	12 TIMES	INTERFACE DEFECTIVE(OUTDOOR)
2 sec —	13 TIMES	IC531 DEFECTIVE

(-- LIGHTS FOR 0.35 SEC AT INTERVAL OF 0.35 SEC.)

*IF THE INTERFACE CIRCUIT IS DEFECTIVE WHEN THE POWER IS TURNED ON.
THE SELF-DIAGNOSIS INDICATION WILL NOT WORK.

*IF THE INDOOR UNIT CAN NOT BE OPERATED AT ALL,

REFER TO THE TABLE BELOW IF THE INDOOR UNIT DOSE NOT WORK AT ALL.

CHECK POINT	ACTION/REPLACEMENT PARTS, etc
FU1(3.15A)FUSE BLOWN	REPLACE THE PART WHICH CAUSED BLOWING /DISCONNECTION OF FU1(3.15A)FUSE
COME OFF OR DISCONNECTION OF THE CONNECTOR FOR INDICATING P.W.B	FIX CN16 CONNECTOR
FAILURE OF CONTROL P.W.B	REFER TO THE SERVICE GUIDE FOR HOW TO DETERMINE THE FAILED PART

SELF-DIAGNOSIS LIGHTING MODE

MODEL RAC-18/25/35WEC
RAC-10/14WECI

⚠⚠ DANGER (DC350V)

- CUT THE POWER SOURCE AND WAIT MORE THAN 10 MINUTES BEFORE SERVICE WORK.

- CONFIRM THE DC VOLTAGE AT THE MEASURING POINT SHOWN IN BELOW FIGURE MUST BE LESS THAN 10V.

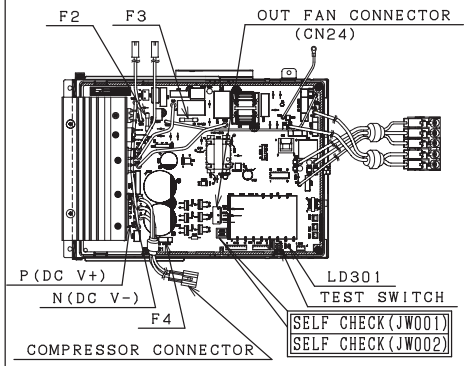

※OTHERS CHECK POINTS

1. DIAGNOSIS FOR 『REVERSING VALVE OPERATION ERROR』;
⇒CHECK REVERSING VALVE WIRE CONNECTION EITHER WIRE BROKEN OR NOT. IF OK CHECK 3.15A FUSE. IF BROKEN REPLACE FUSE.
2. 『WHEN DISPLAY THE COMMUNICATION ERROR OR THE OUTDOOR DO NOT RUN AT ALL』.
⇒PLEASE CHECK THE CONTINUITY OF THE INDOOR⇔OUTDOOR CONNECTING CORD(F CABLE).

『OUTDOOR FAN MOTOR CHECK』DIAGNOSIS METHOD

1. PUT THE POWER OFF.
2. REMOVE THE OUTDOOR FAN MOTOR'S CONNECTOR FROM" CN24
3. ROTATE THE FAN MOTOR BY HAND AND CHECK WHETHER THE FAN MOTOR IS LOCKED OR NOT.
4. MEASURE THE RESISTANCE BETWEEN EACH TERMINAL OF THE FAN MOTOR CONNECTOR. NORMAL RESISTANCE BETWEEN EACH TERMINAL:20~50Ω

※INSERT THE FAN MOTOR'S CONNECTOR AFTER FINISHING STEPS 1 TO 4.

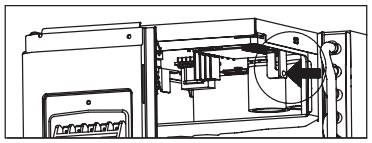

DURING STOP	
LD301	CONTENTS
LIGHT	NORMAL OPERATION
2 SEC LIGHTING AND 0.3 SEC LIGHTS OUT REPETITION	OVERLOAD OPERATION (NORMAL OPERATION)

IN CASE OF DIFFICULT TO JUDGE THE ABNORMAL WITH ODU CONTROLLER OR THE COMP., BLINKING IN 2, 3, 4 OR 5 TIMES AT SELF-DIAGNOSIS IN THE STOPPING STATUS, PLEASE PERFORM THE MEGA CHECK AND CONFIRM THE INSULATION WITH THE COMPRESSOR. AS THERE IS NOT ABNORMAL FOR THE INSULATION WITH COMPRESSOR, PLEASE PERFORM 『SELF-CHECK』.

『SELF-CHECK』DIAGNOSIS METHOD

1. PUT THE POWER OFF.
2. CUTTING 『JW001』BY NIPPER OR BEING SHORT CIRCUIT BETWEEN 『JW001』AND『JW002』(FASTEN TOGETHER WITH A CLIP).
3. PUT THE POWER ON AND OPERATE INDOOR UNIT WITH VENTILATION MODE.
4. PRESS TEST/SERVICE SWITCH FOR 1 SECOND OR MORE (WITHIN 3 MINUTES).
5. SELF-CHECK RESULT WILL DISPLAY AT LD301. SEE THE ABOVE TABLE(『SELF-CHECK』DIAGNOSIS RESULT) FOR THE DETAIL.
6. PUT THE POWER OFF, THEN RELEASE BACK JW001 AND JW002 TO ORIGINAL CONDITION (NO SHORT CIRCUIT CONDITION).

※IF FORGET TO RELEASE BACK JW001 AND JW002, THE TIMER LAMP OF THE INDOOR UNIT BLINKS 12 TIMES.

『SELF-CHECK』 DIAGNOSIS RESULT

SELF-DIAGNOSIS BLINKING MODE ▨:BLINK

LD301 (RED)	SELF-DIAGNOSIS CONTENTS	HOW TO REPIAR
▨ ONCE	NOT CONTROLLER DEFECTIVE	·CHANGE THE COMPRESSOR
▨ 2 TIMES	FOUND PEAK CURRENT ERROR	·CHANGE ODU CONTROLLER
▨ 7 TIMES	COMPRESSOR CURRENT ABNORMAL	·CHECK THE COMPRESSOR ·CONNECTOR AND CONNECT IT PROPERLY ·IF ABOVE ARE OK, CHANGE THE ODU CONTROLLER
▨ 10TIMES	ABNORMAL DC VOLTAGE	·REACTOR IS DISCONNECTION. →CONNECT IT PROPERLY ·IF AC VOLTAGE INPUT ABNORMAL (OVER STANDARD VOLTAGE±10%) →FOLLOW STANDARD AC VOLTAGE INPUT ·IF AC VOLTAGE INPUT IS NORMAL (WITHIN±10%)→CHANGE P.W.B
▨ 13TIMES	EEPROM READING ERROR	·CHANGE ODU CONTROLLER

RIGHT SIDE ARROW INDICATE THE POSSITION OF TEST SWITCH LEVER ON THE SIDE PANEL (SHOWN IN LEFT FIGURE.)

DURING STOP

SELF-DIAGNOSIS BLINKING MODE ▨:BLINK □:OFF

LD301 (RED)	SELF DIAGNOSIS CONTENTS	MAIN CHECK POINT	HOW TO REPAIR
□ OFF	NORMAL STOP (STOPPED BY INDOOR THERMO-STAT OR MAIN OPERATION OFF)	1. NO NEED TO CHECK	1. NOT ANY MALFUNCTION
▨ ONCE	FAN MODE OPERATION, RESET STOP	1. INDOOR AIR CLEAN OPERATION 2. OTHER CAUSE	1. NOT ANY MALFUNCTION 2. CHANGE ODU CONTROLLER
▨ 2 TIMES	PEAK CURRENT CUT	1. ODU CONTOROLLER DEFECTIVE 2. COMPRESSOR ABNORMAL LOAD	1. CHANGE ODU CONTROLLER 2. CHECK THE COMPRESSOR
▨ 3 TIMES	ABNORMAL LOW SPEED ROTATION	1. ODU CONTROLLER DEFECTIVE 2. COMPRESSOR ABNORMAL LOAD	1. CHANGE ODU CONTROLLER 2. CHECK THE COMPRESSOR
▨ 4 TIMES	SWITCHING FAILURE	1. COMPRESSOR CONNECTOR OPEN 2. COMPRESSOR ABNORMAL LOAD 3. ODU CONTROLLER DEFECTIVE	1. INSERT THE CONNECTOR 2. CHECK THE COMPRESSOR 3. CHANGE ODU CONTROLLER
▨ 5 TIMES	OVERLOAD LOWER LIMIT CUT	1. OBSTACLE SURROUND THE ODU MAY CAUSE 2. OTHER CAUSE	1. REMOVE THE OBSTRUCTION 2. CHECK CYCLE PIPE
▨ 6 TIMES	OH THERMISTOR TEMPERATURE RISE	1. DUE TO OPEN CONNECTOR 2. LEAKAGE OF REFRIGERANT 3. OTHER CAUSE	1. INSERT THE CONNECTOR 2. CHECK THE CYCLE PIPE AND RECHARGE THE REFRIGERANT 3. CHANGE ODU CONTROLLER
▨ 7 TIMES	THERMISTOR ABNORMAL	1. CONNECTOR INSERT MISS 2. OPEN CIRCUIT/SHORT CIR-CUIT OF THERMISTOR WIRE 3. ODU CONTROLLER DEFECTIVE	1. INSERT PROPERLY 2. CHANGE THE THERMISTOR 3. CHANGE ODU CONTROLLER
▨ 9 TIMES	COMMUNICATIONS ERROR	1. F CABLE MISS CONNECTION 2. F CABLE DISCONNECTION 3. ODU CONTROLLER DEFECTIVE	1. F CABLE CONNECT PROPERLY 2. CHANGE THE F CABLE 3. CHANGE ODU CONTROLLER
▨ 10 TIMES	ABNORMAL POWER SOURCE	1. REACTOR IS UNCONNECTED 2. ABNORMAL AC INPUT: OUT OF THE RANGE (230±10%) 3. AC INPUT IS NORMAL	1. CONNECT REACTOR PROPERLY 2. CONNECT TO NORMAL AC POWER SOURCE 3. CHANGE ODU CONTROLLER
▨ 11 TIMES	ODU FAN STOP BY STRONG REVERSE WIND	1. OUTDOOR FAN STOP BY STRONG REVERSE WIND	1. IT WILL RE-START AFTER THE WIND BECOME WEAK
▨ 12 TIMES	OUTDOOR FAN LOCK ERROR	1. OUTDOOR FAN STOP BY STRONG REVERSE WIND 2. PROPELLER FAN LOCK 3. OUTDOOR FAN MOTOR LOCK 4. OUTDOOR FAN MOTOR OK	1. AUTOMATICALLY RE-START AFTER WIND BECOME WEAK 2. REMOVE THE OBSTRUCTION 3. CHANGE THE FAN MOTOR 4. CHANGE ODU CONTROLLER
▨ 13 TIMES	EEPROM READ ERROR	·CHANGE OUTDOOR UNIT CONTROLLER	
▨ 14 TIMES	ACTIVE VOLTAGE ABNORMAL	1. ABNORMAL OUTDOOR CONTROLLER 2. ABNORMAL COMPRESSOR LOAD	1. CHANGE ODU CONTROLLER 2. CHECK THE COMPRESSOR
▨ 16 TIMES	HIGH LORD STOP	1. SERVICE VALVE CLOSE 2. OBSTACLE SURROUND THE ODU UNIT MAY CAUSE 3. CLOGGED FILTER IN INDOOR UNIT CAUSE.	1. CHECK SURVICE VALVE 2. REMOVE THE OBSTRUCTION 3. CHECK FILTER

SELF-DIAGNOSIS LIGHTING MODE

MODEL RAC-50WEC
RAC-20WECI

⚠ ⚠ DANGER(DC350V)

- CUT THE POWER SOURCE AND WAIT MORE THAN 10 MINUTES BEFORE SERVICE WORK.
- CONFIRM THE DC VOLTAGE AT THE MEASURING POINT SHOWN IN BELOW FIGURE MUST BE LESS THAN 10V.

DURING STOP	
LD301	CONTENTS
LIGHT	NORMAL OPERATION
2 SEC LIGHTING AND 0.3 SEC LIGHTS OUT REPETITION	OVERLOAD OPERATION(NORMAL OPERATION)

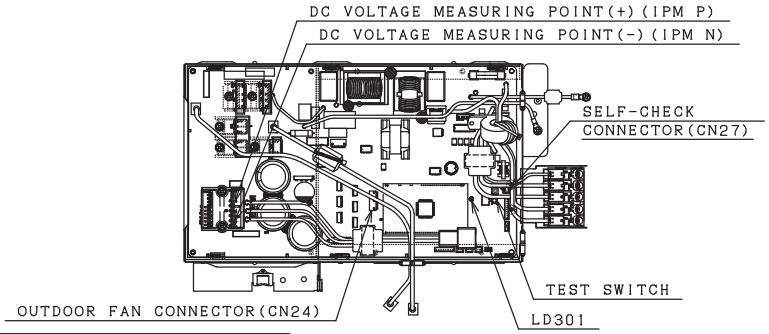

DURING STOP

SELF-DIAGNOSIS BLINKING MODE ▨:BLINK □:OFF

LD301 (RED)	SELF DIAGNOSIS CONTENTS	MAIN CHECK POINT	HOW TO REPAIR
□ OFF	NORMAL STOP (STOPPED BY INDOOR THERMO-STAT OR MAIN OPERATION OFF)	1. NO NEED TO CHECK ⟹	1. NOT ANY MALFUNCTION
▨ ONCE	FAN MODE OPERATION, RESET STOP	1. INDOOR AIR CLEAN OPERATION ⟹ 2. OTHER CAUSE ⟹	1. NOT ANY MALFUNCTION 2. CHANGE ODU CONTROLLER
▨ 2 TIMES	PEAK CURRENT CUT	1. ODU CONTOROLLER DEFECTIVE ⟹ 2. COMPRESSOR ABNORMAL LOAD ⟹	1. CHANGE ODU CONTROLLER 2. CHECK THE COMPRESSOR
▨ 3 TIMES	ABNORMAL LOW SPEED ROTATION	1. ODU CONTROLLER DEFECTIVE ⟹ 2. COMPRESSOR ABNORMAL LOAD ⟹	1. CHANGE ODU CONTROLLER 2. CHECK THE COMPRESSOR
▨ 4 TIMES	SWITCHING FAILURE	1. COMPRESSOR CONNECTOR OPEN ⟹ 2. COMPRESSOR ABNORMAL LOAD ⟹ 3. ODU CONTROLLER DEFECTIVE ⟹	1. INSERT THE CONNECTOR 2. CHECK THE COMPRESSOR 3. CHANGE ODU CONTROLLER
▨ 5 TIMES	OVERLOAD LOWER LIMIT CUT	1. OBSTACLE SURROUND THE ODU MAY CAUSE ⟹ 2. OTHER CAUSE ⟹	1. REMOVE THE OBSTRUCTION 2. CHECK CYCLE PIPE
▨ 6 TIMES	OH THERMISTOR TEMPERATURE RISE	1. DUE TO OPEN CONNECTOR ⟹ 2. LEAKAGE OF REFRIGERANT ⟹ 3. OTHER CAUSE ⟹	1. INSERT THE CONNECTOR 2. CHECK THE CYCLE PIPE AND RECHARGE THE REFRIGERANT 3. CHANGE ODU CONTROLLER
▨ 7 TIMES	THERMISTOR ABNORMAL	1. CONNECTOR INSERT MISS ⟹ 2. OPEN CIRCUIT/SHORT CIR-CUIT OF THERMISTOR WIRE ⟹ 3. ODU CONTROLLER DEFECTIVE ⟹	1. INSERT PROPERLY 2. CHANGE THE THERMISTOR 3. CHANGE ODU CONTROLLER
▨ 9 TIMES	COMMUNICATIONS ERROR	1. F CABLE MISS CONNECTION ⟹ 2. F CABLE DISCONNECTION ⟹ 3. ODU CONTROLLER DEFECTIVE ⟹	1. F CABLE CONNECT PROPERLY 2. CHANGE THE F CABLE 3. CHANGE ODU CONTROLLER
▨ 10 TIMES	ABNORMAL POWER SOURCE	1. REACTOR IS UNCONNECTED ⟹ 2. ABNORMAL AC INPUT: OUT OF THE RANGE (230±10%) ⟹ 3. AC INPUT IS NORMAL ⟹	1. CONNECT REACTOR PROPERLY 2. CONNECT TO NORMAL AC POWER SOURCE 3. CHANGE ODU CONTROLLER
▨ 11 TIMES	ODU FAN STOP BY STRONG REVERSE WIND	1. OUTDOOR FAN STOP BY STRONG REVERSE WIND ⟹	1. IT WILL RE-START AFTER THE WIND BECOME WEAK
▨ 12 TIMES	OUTDOOR FAN LOCK ERROR	1. OUTDOOR FAN STOP BY STRONG REVERSE WIND ⟹ 2. PROPELLER FAN LOCK ⟹ 3. OUTDOOR FAN MOTOR LOCK ⟹ 4. OUTDOOR FAN MOTOR OK ⟹	1. AUTOMATICALLY RE-START AFTER WIND BECOME WEAK 2. REMOVE THE OBSTRUCTION 3. CHANGE THE FAN MOTOR 4. CHANGE ODU CONTROLLER
▨ 13 TIMES	EEPROM READ ERROR	·CHANGE OUTDOOR UNIT CONTROLLER	
▨ 14 TIMES	ACTIVE VOLTAGE ABNORMAL	1. ABNORMAL OUTDOOR CONTROLLER ⟹ 2. ABNORMAL COMPRESSOR LOAD ⟹	1. CHANGE ODU CONTROLLER 2. CHECK THE COMPRESSOR
▨ 15 TIMES	CIRCUIT ABNORMAL	·CHANGE OUTDOOR UNIT CONTROLLER	
▨ 16 TIMES	HIGH LORD STOP	1. SERVICE VALVE CLOSE ⟹ 2. OBSTACLE SURROUND THE ODU UNIT MAY CAUSE ⟹ 3. CLOGGED FILTER IN INDOOR UNIT CAUSE. ⟹	1. CHECK SURVICE VALVE 2. REMOVE THE OBSTRUCTION 3. CHECK FILTER

※EXAMPLE OF BLINKING (5TIMES) ▮▮▮▮▮ 2SEC ▮ (▮··LIGHTS FOR 0.25 SEC AT INTERVAL OF 0.25 SEC.) ODU:OUTDOOR UNIT

IN CASE OF DIFFICULT TO JUDGE THE ABNORMAL WITH ODU CONTROLLER OR THE COMP., BLINKING IN 2, 3, 4 OR 5 TIMES AT SELF-DIAGNOSIS IN THE STOPPING STATUS, PLEASE PERFORM THE MEGA CHECK AND CONFIRM THE INSULATION WITH THE COMPRESSOR. AS THERE IS NOT ABNORMAL FOR THE INSULATION WITH COMPRESSOR, PLEASE PERFORM 【SELF-CHECK】.

【SELF-CHECK】DIAGNOSIS METHOD

1. PUT THE POWER OFF.
2. REMOVE THE SELF-CHECK CONNECTOR"CN27".
3. PUT THE POWER ON. (LD301:4 SEC LIGHTING AND 2 SEC LIGHTS OUT).
4. PUSH 【TEST SWITCH】DURING 1 SEC OR MORE.
5. 【SELF-CHECK】DIAGNOSIS RESULT WILL DISPLAY AT LD301. SEE THE BELOW TABLE FOR THE DETAIL.
6. PUT THE POWER OFF AND CONNECT THE SELF-CHECK CONNECTOR"CN27".

※IF FORGET TO CONNECTING THE "CN27", THE TIMER LAMP OF THE INDOOR UNIT BLINKS 12 TIMES.

【SELF-CHECK】 DIAGNOSIS RESULT

SELF-DIAGNOSIS BLINKING MODE ▨:BLINK

LD301 (RED)	SELF-DIAGNOSIS CONTENTS	HOW TO REPIAR
▨ ONCE	NOT CONTROLLER DEFECTIVE	·CHANGE THE COMPRESSOR
▨ 2 TIMES	FOUND PEAK CURRENT ERROR	·CHANGE ODU CONTROLLER
▨ 7 TIMES	COMPRESSOR CURRENT ABNORMAL	·CHECK THE COMPRESSOR ·CONNECTOR AND CONNECT IT PROPERLY ·IF ABOVE ARE OK, CHANGE THE ODU CONTROLLER
▨ 10TIMES	ABNORMAL DC VOLTAGE	·REACTOR IS DISCONNECTION. →CONNECT IT PROPERLY ·IF AC VOLTAGE INPUT ABNORMAL (OVER STANDARD VOLTAGE±10%) →FOLLOW STANDARD AC VOLTAGE INPUT ·IF AC VOLTAGE INPUT IS NORMAL (WITHIN±10%)→CHANGE P.W.B
▨ 13TIMES	EEPROM READING ERROR	·CHANGE ODU CONTROLLER

【OUTDOOR FAN MOTOR CHECK】DIAGNOSIS METHOD

1. PUT THE POWER OFF.
2. REMOVE THE OUTDOOR FAN MOTOR'S CONNECTOR FROM"CN24".
3. ROTATE THE FAN MOTOR BY HAND AND CHECK WHETHER THE FAN MOTOR IS LOCKED OR NOT.
4. MEASURE THE RESISTANCE BETWEEN EACH TERMINAL OF THE FAN MOTOR CONNECTOR. NORMAL RESISTANCE BETWEEN EACH TERMINAL:20~50Ω

※INSERT THE FAN MOTOR'S CONNECTOR AFTER FINISHING STEPS 1 TO 4.

※OTHERS CHECK POINTS

1. DIAGNOSIS FOR 【REVERSING VALVE OPERATION ERROR】;
⇒CHECK REVERSING VALVE WIRE CONNECTION EITHER WIRE BROKEN OR NOT. IF OK CHECK 3. 15A FUSE. IF BROKEN REPLACE FUSE
2. 【WHEN DISPLAY THE COMMUNICATION ERROR OR THE OUTDOOR DO NOT RUN AT ALL】.
⇒PLEASE CHECK THE CONTINUITY OF THE INDOOR ⇔ OUTDOOR CONNECTING CORD(F CABLE).

Forced cooling operation

The cooling operation can be forcibly performed for collecting refrigerant and inspecting failures.
Do not perform the forced cooling operation continuously for long hours,
because the compressor continues to be in operational status, regardless of room temperature.

＜How to start the operation＞
・The operation of the unit should be stopped.
・Press and hold the "Temporary operation SW"
shown in the right figure for 5 sec.

＜How to stop the operation＞
・Press and hold the "Temporary operation SW" again.
Or stop the operation using the remote controller.

※During the forced cooling operation,
the "Timer indicator" blinks twice.

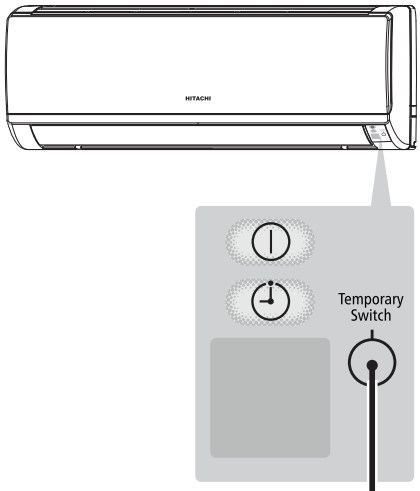

Temporary operation switch

When performing the forced cooling operation, turn the power off once. If you press and hold the switch for 5 sec or longer, the forced cooling operation starts. To stop the forced cooling operation, press the switch once again or stop the operation using the remote controller.

Diagnosis and troubleshooting of indoor electric parts, outdoor electric parts and refrigerating cycle

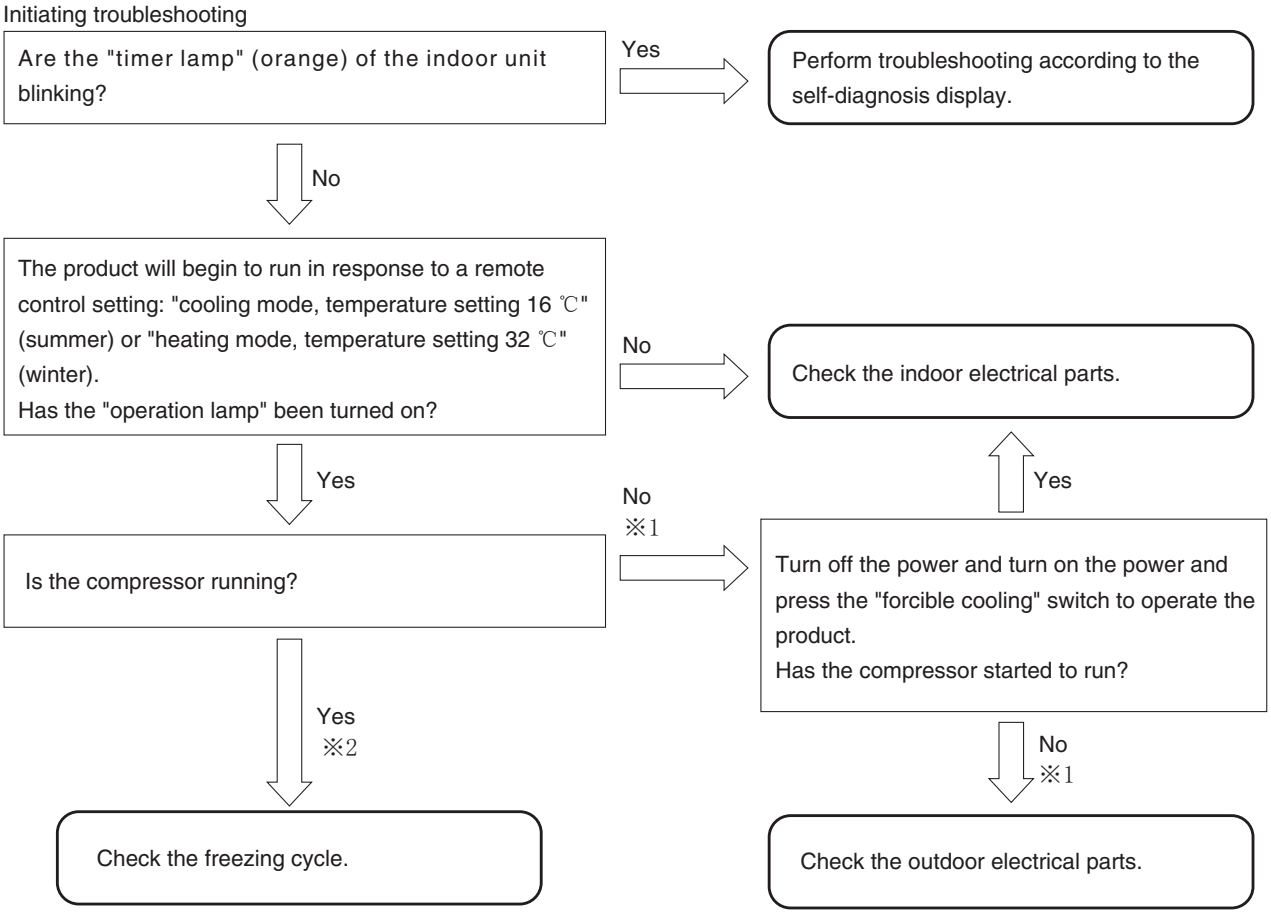

< Troubleshooting by using the self-diagnosis memory function>

· By using the self-diagnosis memory function, you can check the failure mode (※1) occurring in the outdoor electrical parts on the indoor unit side.

Steps
1. Clear the troubleshooting data.
2. Run the product for several minutes under the conditions where the compressor runs.
3. Redisplay and check the data written in the self-diagnosis memory.

· The self-diagnosis memory function can also be used to catch sporadic failure phenomena.

Steps
1. Clear the troubleshooting data.
2. Have the user use the product as usual until a failure phenomenon occurs.
   (The period depends on the incidence of the phenomenon.)
3. At a later date, redisplay and check the data written in the self-diagnosis memory.

· For the outdoor self-diagnosis display (OH thermistor heat-up, overload lower limit cut) stemming from the freezing cycle or operating condition, the time lag is long from operation startup to the emergence of the phenomenon.
Moreover, it is affected by the temperature, sunshine, operating hours, and other factors of the day, so that the phenomenon may not be able to be identified at the time of a repair service visit. In that case too, use the self-diagnosis memory function (※2).

· The outdoor self-diagnosis display "overload lower limit cut" and "OH thermistor heat-up" can be identified only when you are using the self-diagnosis lamp of the outdoor unit and the self-diagnosis memory function of the indoor unit.
Note that this will not be automatically displayed on the indoor unit side.

Checking the indoor unit electrical parts

Introduction

First check the failure phenomenon and status, and then move on to elaborate diagnosis.

Initiating troubleshooting

Is the "timer lamp" (orange) of the indoor unit blinking?

Yes → How many times does the time lamp blinding

- not 4 times → time lamp blinking, please according to the self-diagnosis display.
- 4 times → outdoor ele.unit check.

No ↓

Turn off the power, wait at least 5 seconds, turn it back on, and observe the way the horizontal vanes move for about 30 seconds.

Check 1: Have the horizontal vanes moved? (Yes/No)

↓

Set the remote control unit to cooling mode, temperature setting 16℃ (summer), heating mode, temperature setting 32℃ (winter) and operate the product.

Check 2: Has the product received the remote control signal and has the "operation lamp" gone on? (Yes/No)

If you responded "Yes" to Check 2:

Check 3: Is the compressor of the outdoor unit running? (Yes/No)

If you responded "No" to Check 2:

Check 4: Does the "emergency operation switch" work? (Yes/No)

Check results and next check items

Check 1	Check 2	Check 3	Check 4	Next check item
No	No	—	No	Go on to "The power will not become turned on".
Yes	No	—	Yes	Go on to "The product will not receive the remote control signal".
Yes	Yes	No	—	Go on to "The compressor will not run".

1. Failure phenomenon: The power will not become turned on.

［Situation ］ Neither initialization, remote control, nor any other step works on the vane position at power-on.

[Estimated failure locations]

- 3.15 A fuse blown out
- Control power circuit
- Connector loose, wire break

Estimated cause of fuse blowout
- Abnormally high voltage applied to the power supply
- Indoor fan motor out of order
- Power circuit out of order

［Cautions ］

- Before work, check the power supply voltage. An abnormal voltage may be being supplied in some rare occasions due to a defect in the indoor wiring (a wire break in the neutral wire of the single-phase 3-wire power supply).
- If the 3.15 A fuse has blown out, eliminate the cause of the fuse blowout. Otherwise, there will occur another fuse blowout.
- If the 3.15 A fuse has blown out due to an abnormally high voltage to the power supply, the varistor (VA001) will deteriorate and become destroyed as well.
- On a repair service visit due to the failure phenomenon of "The power will not become turned on", take a "3.15 A fuse" and a "varistor" with you.

［Diagnosis flow ］

Initiating troubleshooting

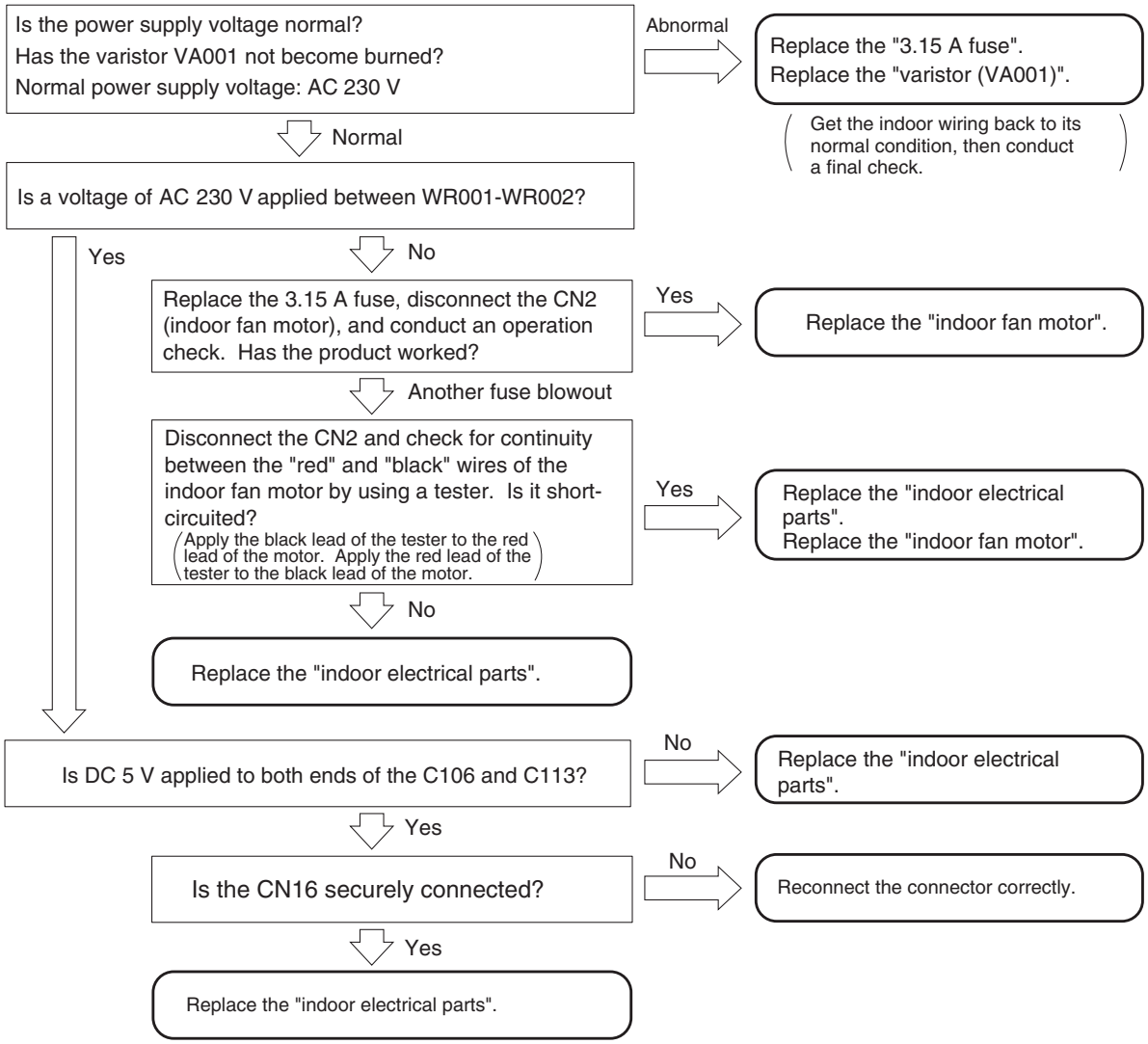

2.Failure phenomenon: The product will not receive a remote control signal.

［Situation ］ The product does not receive a remote control signal. It is not very responsive.
(The product does run normally in response to the emergency operation switch.)

［Estimated failure locations ］
- Remote control failure, remote control low battery level, remote control poorly set
- Remote control light-receiving unit
- Connector loose, wire break
- Normal product (external factors: the remote control units for lighting equipment and other equipment, electrical noise, etc.)

［Cautions ］
- Even if the product is trouble-free, a factor coming from outside the product may hamper the reception of signals from the remote control unit.
- Batteries may decline in capacity at low temperatures. Old batteries decline particularly much in voltage in the morning and evening of winter, resulting in the poor arrival of remote control signals. Instruct your users to use new alkaline batteries.

［Diagnosis flow ］

Initiating troubleshooting

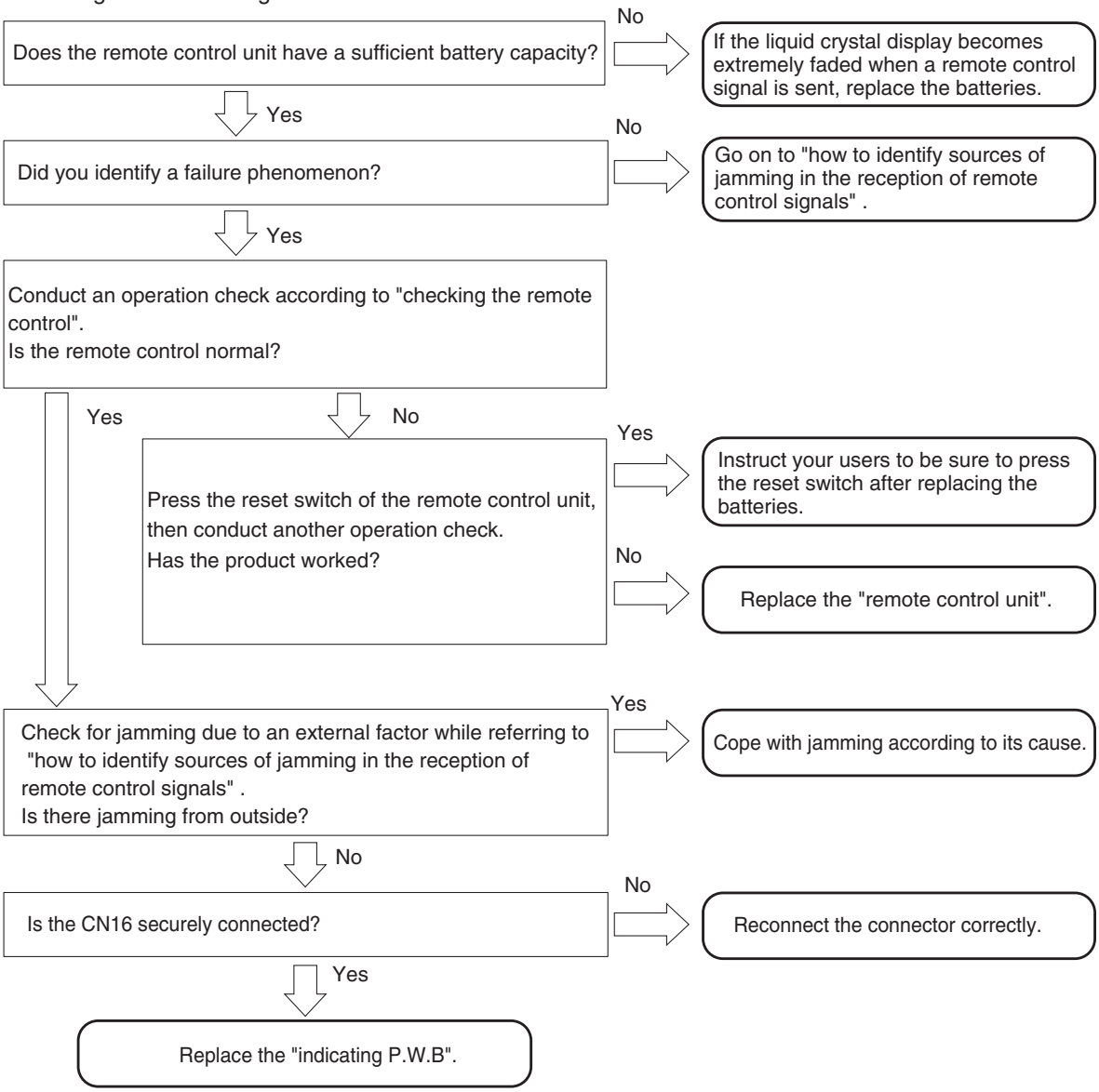

［Cautions in replacing the indicating P.W.B］ Be sure to replace the indicating P.W.B. components.

How to identify sources of jamming in the reception of remote control signals

[Situation] The product may become poorly responsive to remote control signals due to external factors even though the product itself is trouble-free.

[Estimating sources of jamming] Identify the installation status of the air-conditioner and the indoor and outdoor environments to identify possible causes of the jamming.

- Indoor lighting equipment (quantity, type, location)
- Remote control units of other electrical products and equipment
- Is the grounding for the air-conditioner shared with other equipment?
- Are the surroundings of the air-conditioner clear of wireless antenna?
- Is the remote control light-receiving unit protected from direct sunlight?

[Checking and actions]

Effects of lighting equipment (fluorescent lamps)	Checking points · Turn on and off the lighting equipment and check for its effects on the reception of remote control signals. · When cold, the fluorescent lamp tends to emit infrared rays with wavelengths close to those used in remote control. If you cannot detect the phenomenon about which your user is complaining at the time of your visit, such as "the product sometimes fails to receive remote control signals" and "the product fails to receive remote control signals in the morning alone", then turn off the lighting for about 20-30 minutes and wait for the fluorescent lamps to cool down before conducting another check. There are even cases where the product fails to receive remote control signals for 1 to 2 minutes only after the lighting equipment is turned on. · The noise status may vary with the dimming of the lighting equipment. In the case of lighting equipment with a dimmer, therefore, conduct a check with all the light intensities. · If the lighting equipment is the source of the jamming, the remote control light-receiving unit output usually shows a noise waveform as shown in the right-hand figure. In the case of slight jamming, this kind of waveform will not cause practical problems. However, intense degrees of jamming will disable the reception of remote control signals. · When the fluorescent lamp is old and is flickering, it may cause disorders in the reception of remote control signals. 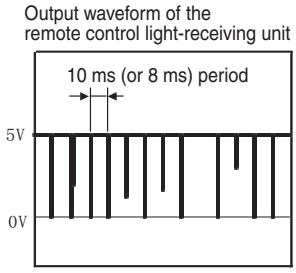 Actions proposed 1. Make it hard for light of the lighting equipment to enter the remote control light-receiving unit. · Separate the lighting equipment from the indoor unit. · Raise the lighting equipment. · Cover the upper half of the light-receiving panel from its rear side with aluminum tape or black vinyl tape. (This will also affect the reception of remote control signals. Therefore, set the range to be covered with tape to a range that is problem-free in practice, while checking the reception status.) 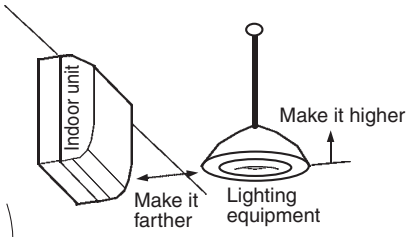 2. Add an interference filter to the front panel of the remote control light-receiving unit. ※ Lighting equipment that produces strong jamming exists although rarely. Some problems may therefore be unsolvable by managing the air-conditioner side alone.
Effects of the remote control units of other equipment	Checking points · If, on the remote control unit of a TV or audio equipment, its sound volume key or something similar is left pressed, infrared signals become continuously sent, thereby jamming the reception of remote control signals. · Check how the remote control unit and related components are stored, thereby checking if there is any possibility that a button may be inadvertently left pressed on the remote control unit of other equipment.  Actions proposed If there is any such possibility, give explanations to your users to that effect and instruct them to exercise caution.

Effects of other electrical products	Checking points · Check the effects of light and power noises coming from other electrical products. · Turn on and off the electrical products, turn off the power and turn on the power, and check their effects on the reception of remote control signals. · For products whose operating states change, check the effects of each state. Actions proposed · Change the location relationship between the air-conditioner and the target products. · Use a different wall outlet for the target products.
Sharing a grounding	Checking points · Check for effects of electrical noises coming into the air-conditioner through grounding wires. · Check if the grounding works is for the air-conditioner alone or shared with other equipment. If there is any equipment that shares it, turn on and off that equipment and detach and reattach the power plugs and examine their effects on the reception of remote control signals. Actions proposed · Establish an independent grounding for the air-conditioner. 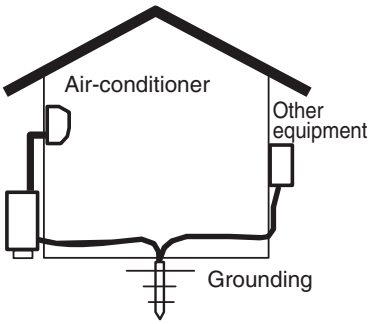
Effects of radio waves	Checking points · Using a wireless transmitter near the air-conditioner may affect the reception of remote control signals. · Have your users try sending signals with a wireless transmitter and examine their effects on the reception of remote control signals. Actions proposed · Add a ferrite core to the power cord and F cable. · Add a ferrite core to the internal wiring of the indoor unit. · Move the wireless antenna.
Effects of direct sunlight	Checking points · Direct sunlight and other intense light make the remote control light-receiving unit less sensitive. · Check for any time zone where the remote control light-receiving unit of the indoor unit is affected by direct sunlight depending on the location of the sun and mirror reflection. Actions proposed · Block the sunlight to protect against direct sunlight.

3. Failure phenomenon: The compressor will not run.

[Situation] The compressor will not run (the same state as the thermometer turned off), the product receives remote control signals normally. The self-diagnosis lamp (LD301) of the outdoor unit blinks once or becomes turned off.

[Estimated failure locations] · Room temperature thermistor, heat exchanger thermistor
· Microcomputer peripheral circuit

[Diagnosis flow]
Initiating troubleshooting

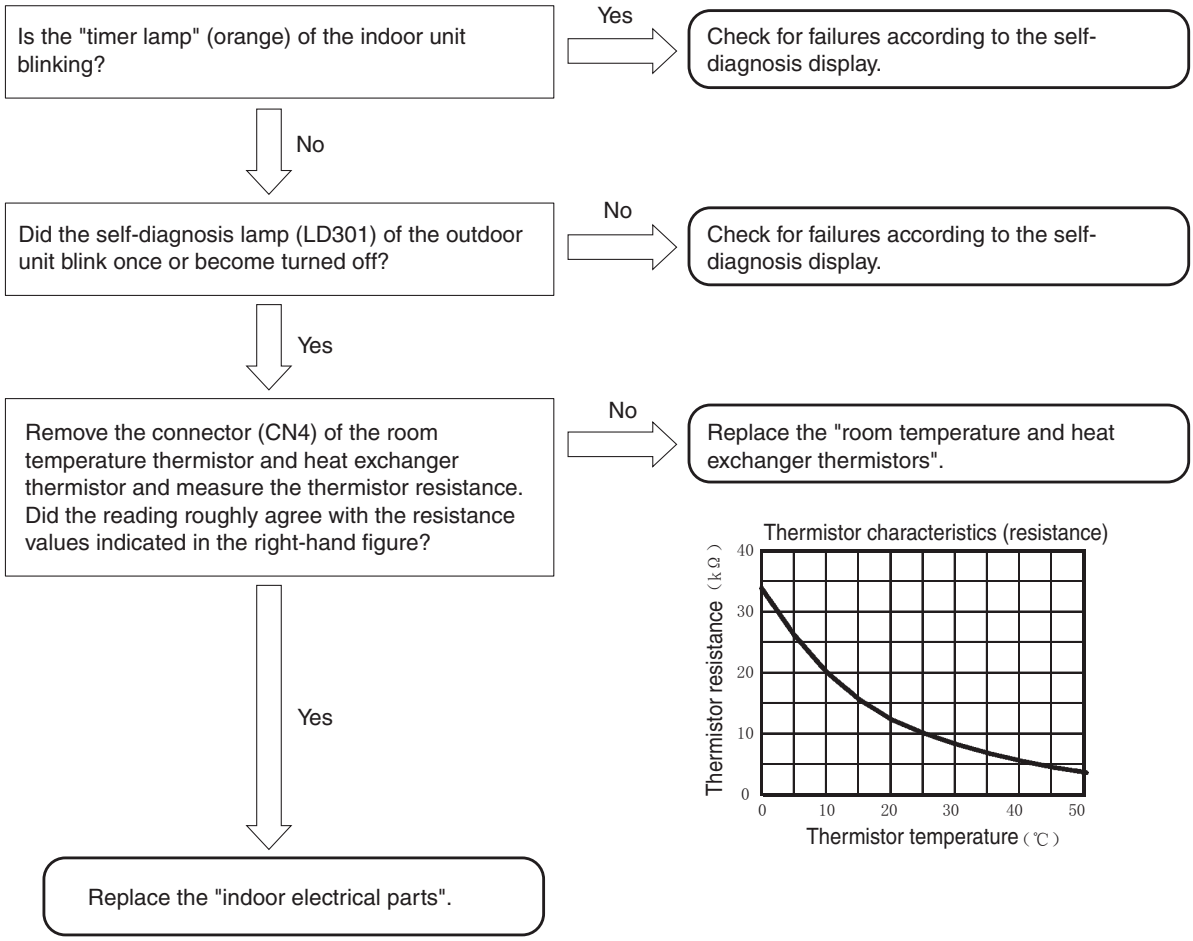

4. Failure phenomenon: The fan motor will not stop.

［Situation ］I have conducted the stop operation on the product by remote control, but the indoor fan motor will not stop.
(It stopped about 10 minutes later.)

［Estimated failure locations ］

- Indoor fan motor
- Fan motor drive circuit

［Diagnosis flow ］

Initiating troubleshooting

Run the product by remote control and then stop it.
(Reproduce the failure phenomenon.)
Is the voltage between pins ④ and ⑥ of the fan motor connector (CN2) below 1.5 V? (Take measurements while the failure phenomenon is present.)

Yes → Replace the "indoor fan motor".

No → Replace the "indoor electrical parts".

5. Timer lamp blinking: blinking once

[Situation] The timer lamp blinks one time and the product will not operate.
(This is not a sign of a breakdown.)

[Estimated failure locations]
- Reversing valve defective.
- The refrigerating cycle block gas leak.

6. Timer lamp blinking: blinking twice

[Situation] The product is giving a display to indicate that it is performing forcible cooling.
(This is not a sign of a breakdown.)

7. Timer lamp blinking: blinking three times

[Situation] The timer lamp blinks three times and the product will not operate.

[Estimated failure locations]
- Meltdown of the terminal board temperature fuse (the terminal board poorly inserted into the F cable)
- Outdoor communication circuit out of order

[Cautions]
- If a terminal board is replaced to counter the meltdown of the terminal board temperature fuse, ensure that the F cable to be inserted into the terminal board has the appropriate dimension for peeling the insulation sheathing and that the insertion region is unbent before inserting it into the terminal board securely.

[Diagnosis flow]

Initiating troubleshooting

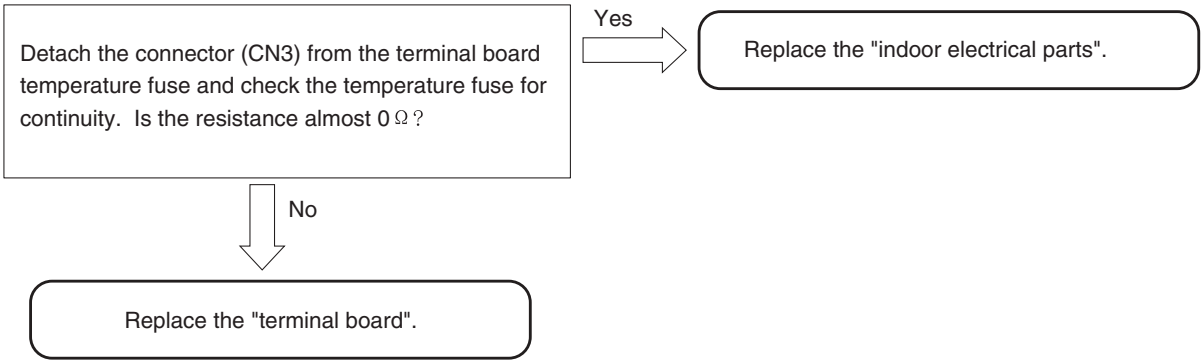

8. Timer lamp blinking: blinking four times

[Situation] The timer lamp blinks four times and the product will not operate.

[Estimated failure locations]
- Outdoor unit error.
- Please confirm the times of the LD301 blinking, and then see the outdoor selfcheck lable.

9. Timer lamp blinking: blinking 9 times

[Situation] The timer lamp blinks 9 times and the product will not run.

[Estimated failure location] ・ Loose connector, wire break, or short-circuit in the room temperature thermistor, heat exchanger thermistor.

[Cautions] ・ Starting the product by remote control will initiate failure detection.
(Merely turning on the power will not activate the failure detection function.)

[Diagnosis flow]
Initiating troubleshooting

Are the room temperature thermistor, heat exchanger thermistor connector (CN4) securely inserted?

No → Correct the connectors.

Yes ↓

Detach the connector (CN4) from the room temperature thermistor and heat exchanger thermistor and measure the thermistor resistances. Did the resistances almost agree with those indicated in the right-hand figure?

(The product will begin detecting failures if it is close to a wire break or short-circuit.)

No → Replace the room temperature and heat exchange thermistor.

Thermistor characteristics (resistance)

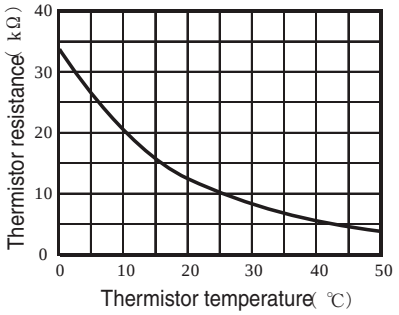

Yes ↓

Replace the "indoor control P.W.B".

10. Timer lamp blinking: blinking 10 times

[Situation] The timer lamp blinks 10 times and the product will not run.

[Estimated failure locations]
- Loose connector or wire break in the indoor fan motor
- Indoor fan motor mechanically locked
- Indoor fan motor
- Indoor fan motor drive circuit

[Diagnosis flow]
Initiating troubleshooting

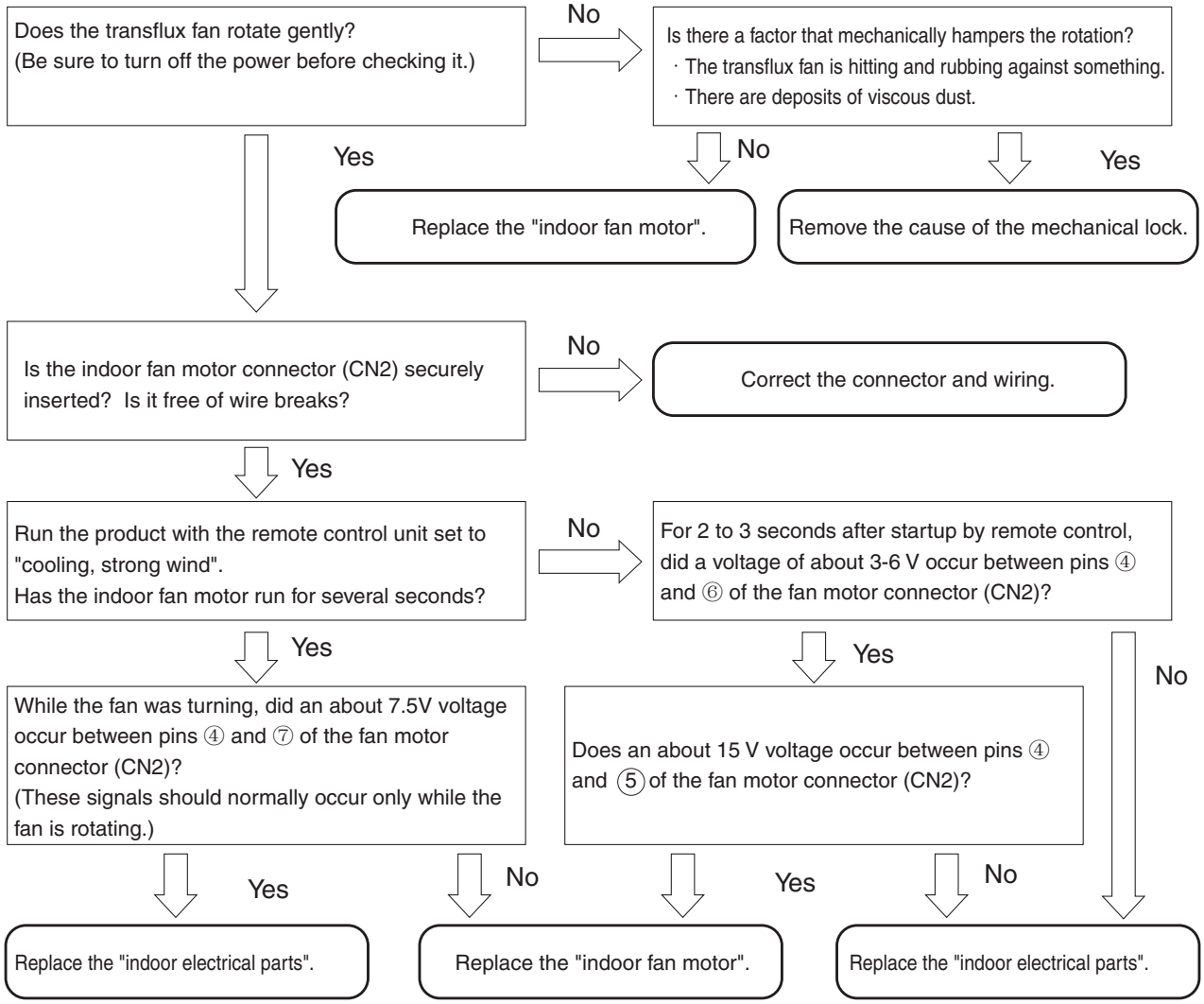

11. Timer lamp blinking: blinking 12 times

[Situation] The timer blinks 12 times and the product will not run.

[Estimated failure locations]
- Erroneous connection in the indoor-outdoor connection line (F cable)
- Forget to connect CN27 of outdoor P.W.B
- Wire break or poor insertion of the indoor-outdoor connection line (F cable)
- Electrical parts in the outdoor unit (communication circuit, power circuit error)
- Communication error due to noise in other home electronics

※This does not constitute a failure in the air-conditioner

[Cautions] ・ When lines 1 and 2 of F cable are erroneously connected (crossed), the product may not enter self-diagnosis display mode. If the self-diagnosis memory stores data about "timer lamp blinked 12 times", then, just in case, check if the F cable is not erroneously connected.

[Diagnosis flow]

Initiating troubleshooting

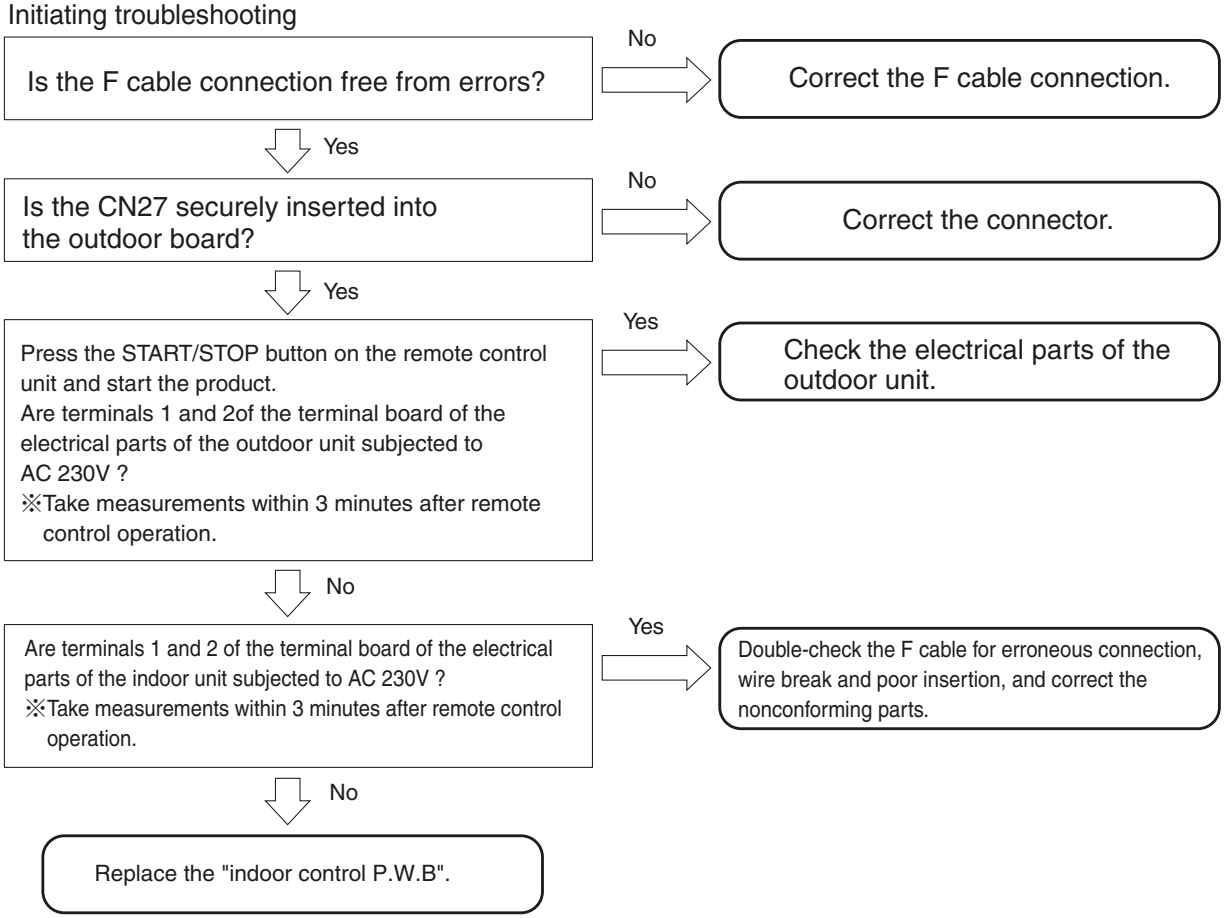

12. Timer lamp blinking: blinking 13 times

[Situation] The timer lamp blinks 13 times and the product will not run.

[Estimated failure location] ・ EEPROM, microcomputer

[Diagnosis flow]

Replace the "indoor control P.W.B".

Checking the electrical parts of the outdoor unit

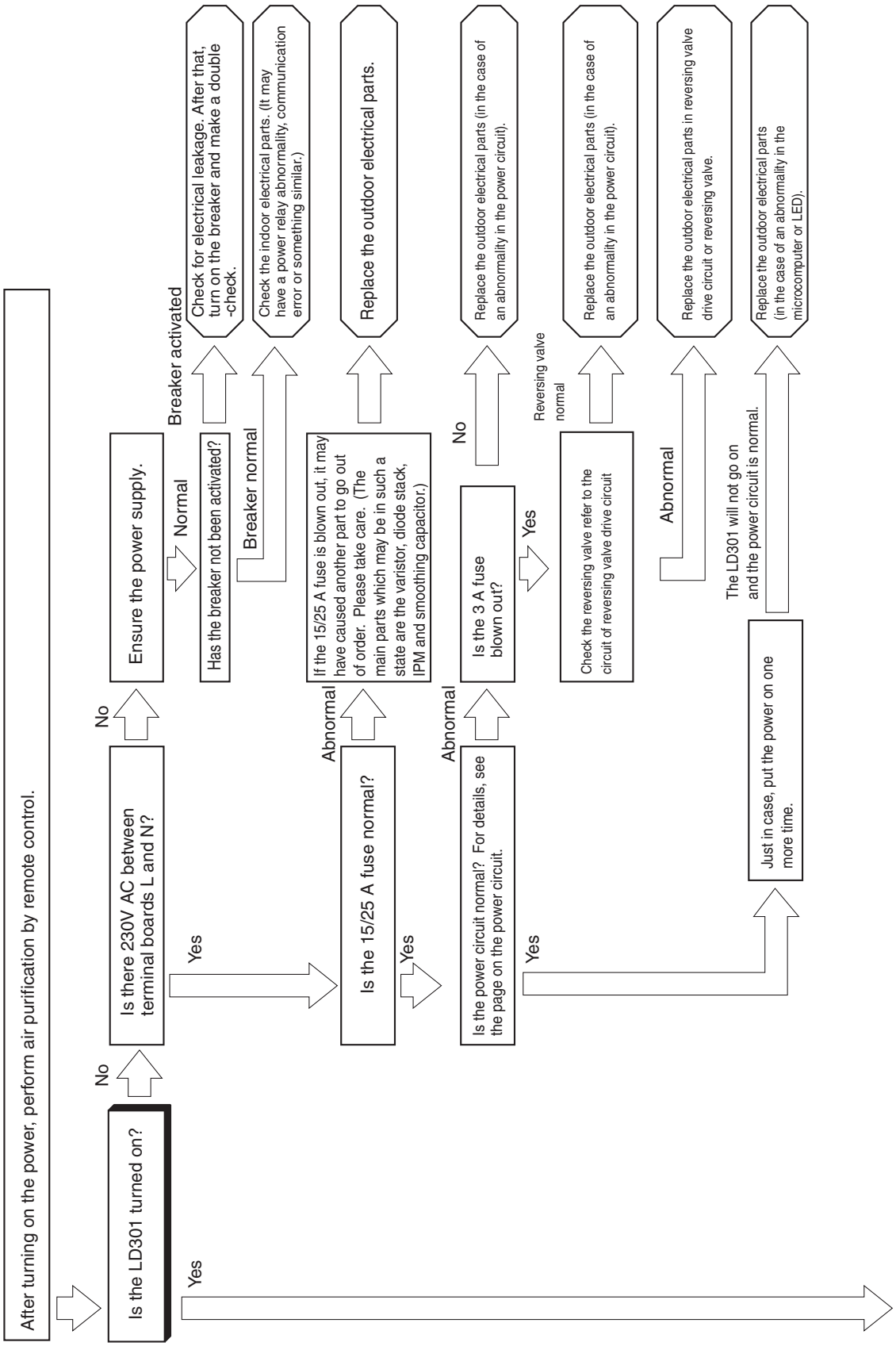

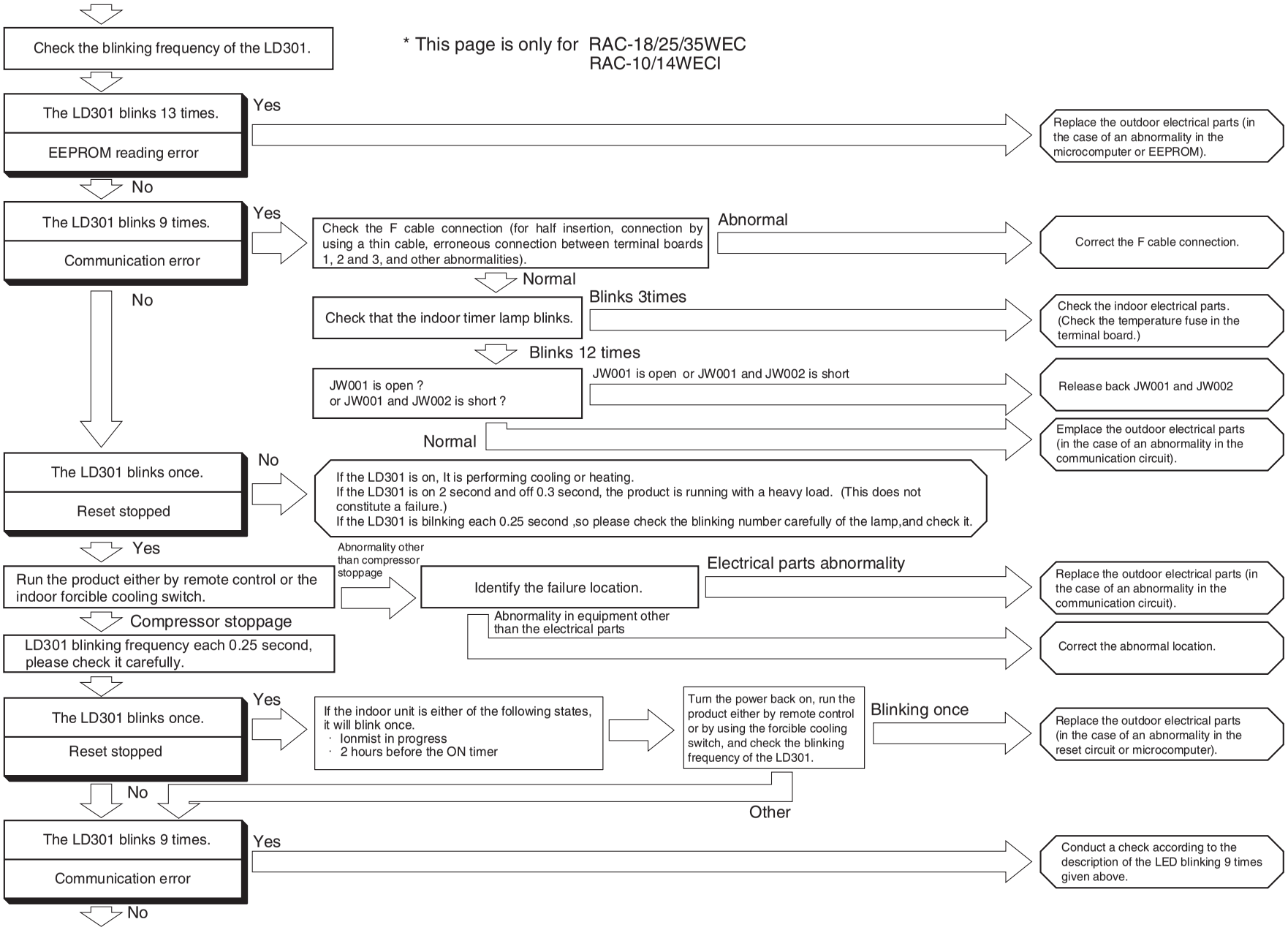

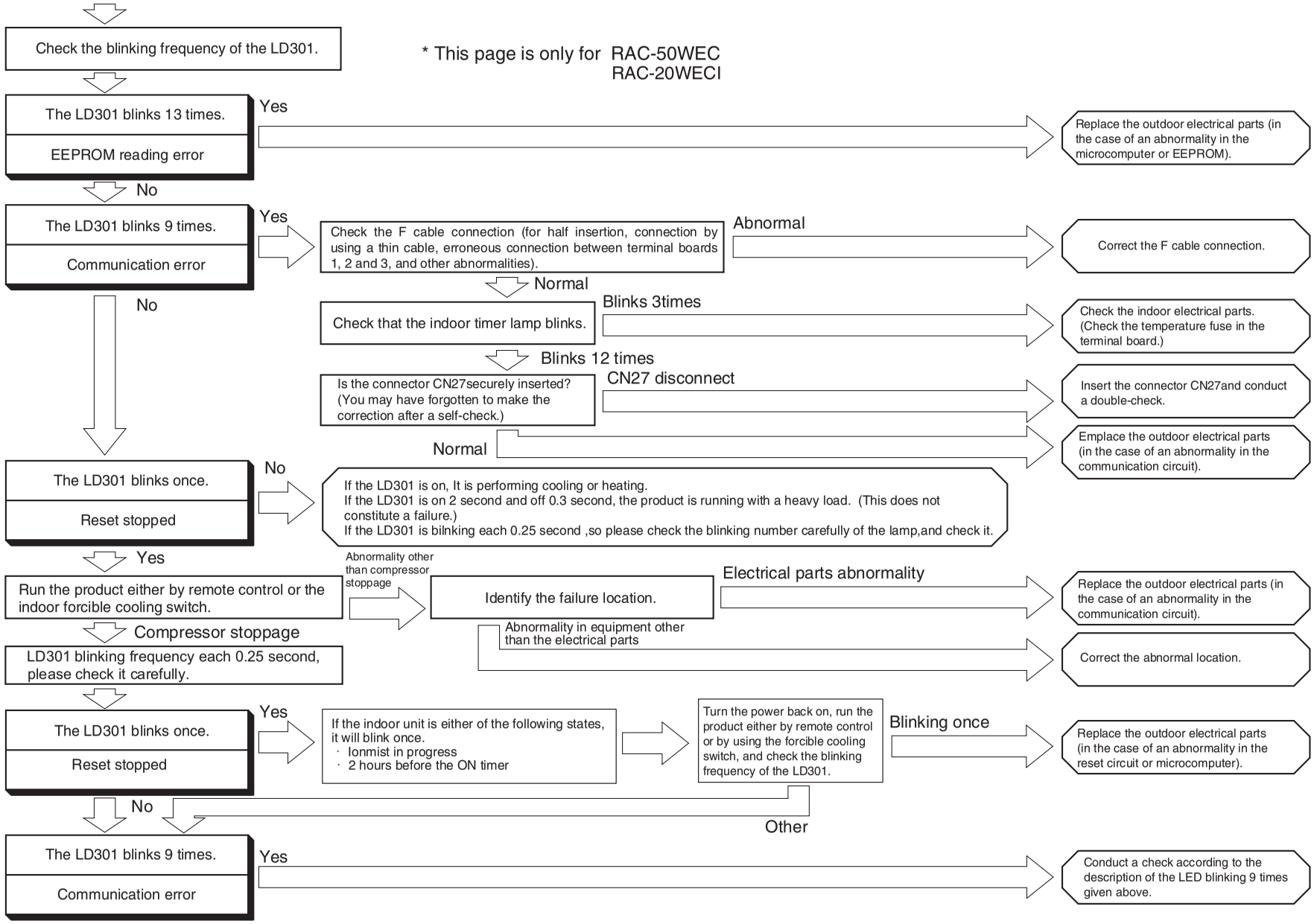

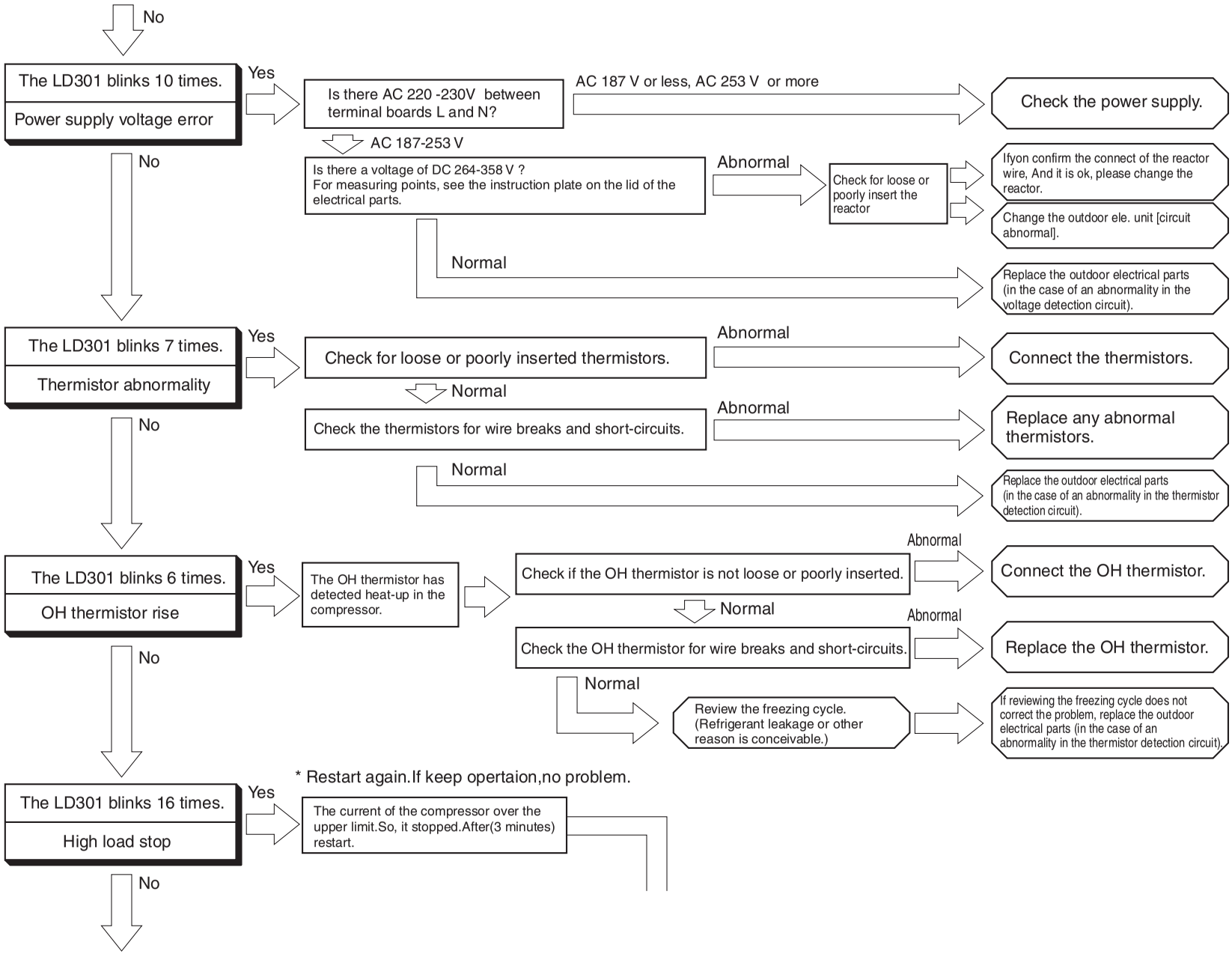

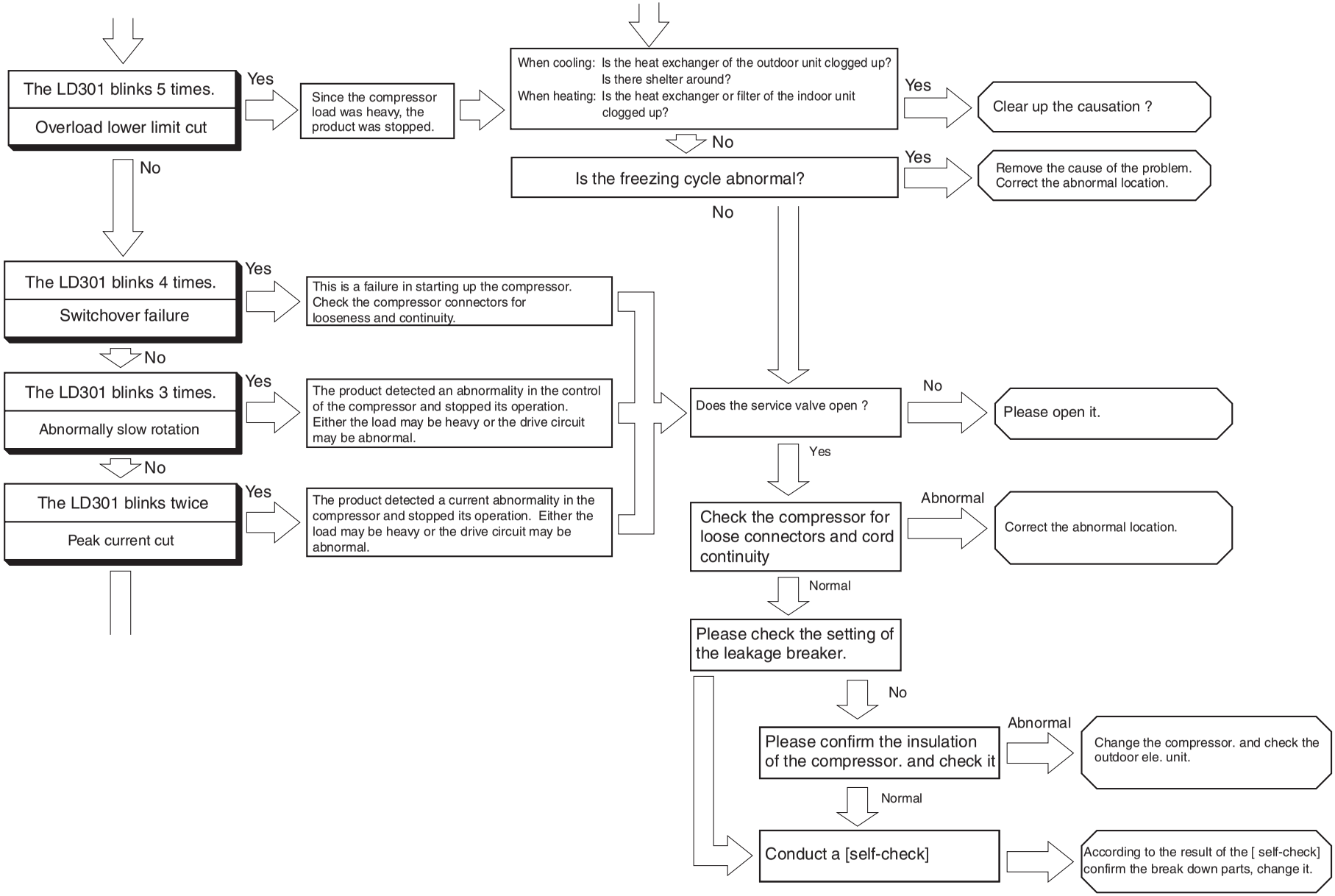

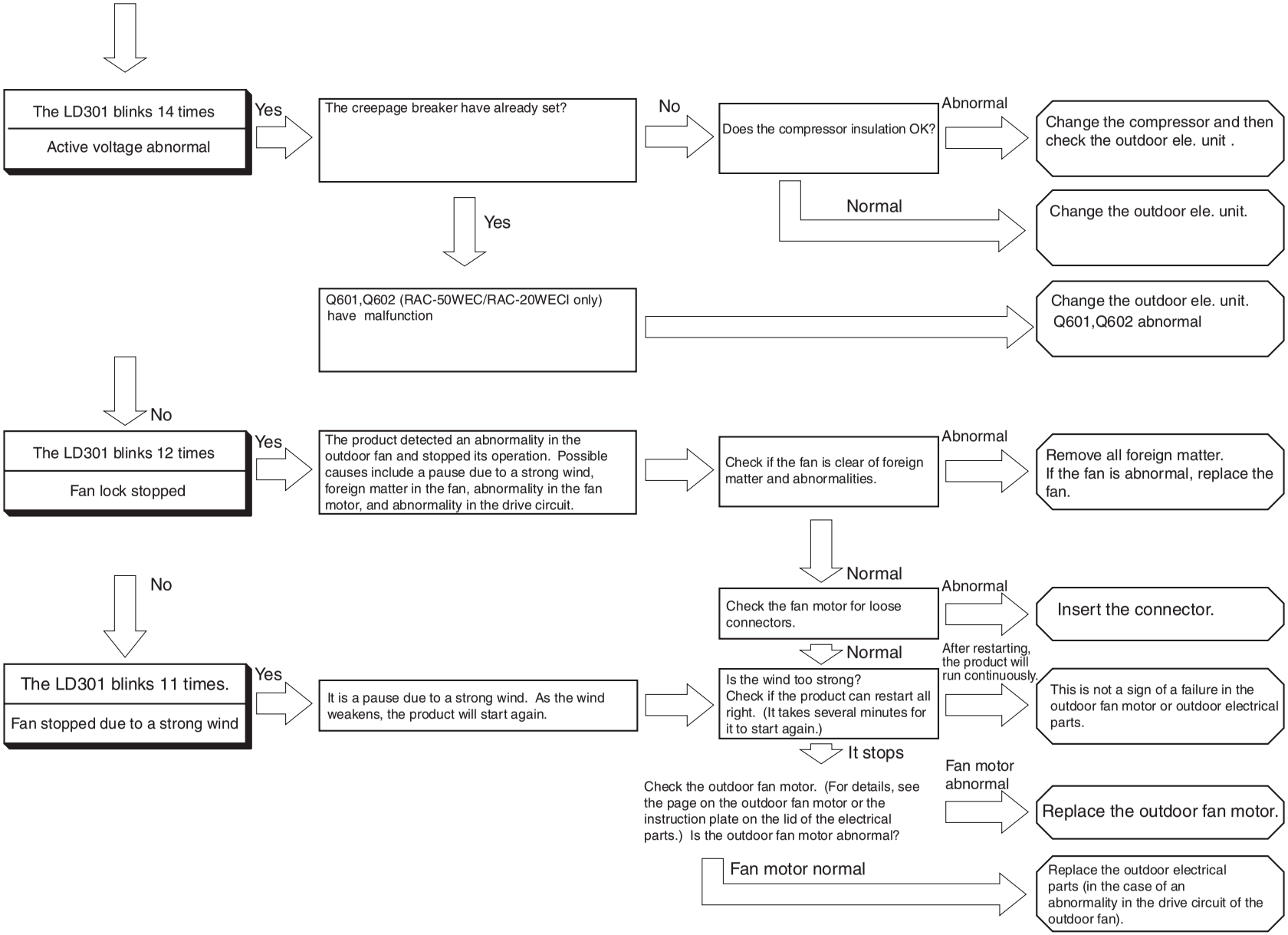

SETTING THE PREVENTION OF MUTUAL INTERFERENCE FOR REMOTE CONTROLLER

Case : 2 sets of indoor units installed near to each other.
If both indoor units can receive the same remote controller signal, please set the remote controller as below. (This setting will change the signal address of each remote controller.)

Initial remote controller signal address setting is A.
This procedure change the remote controller signal address from A to **B**.

1.Remove rear cover as shown in figure

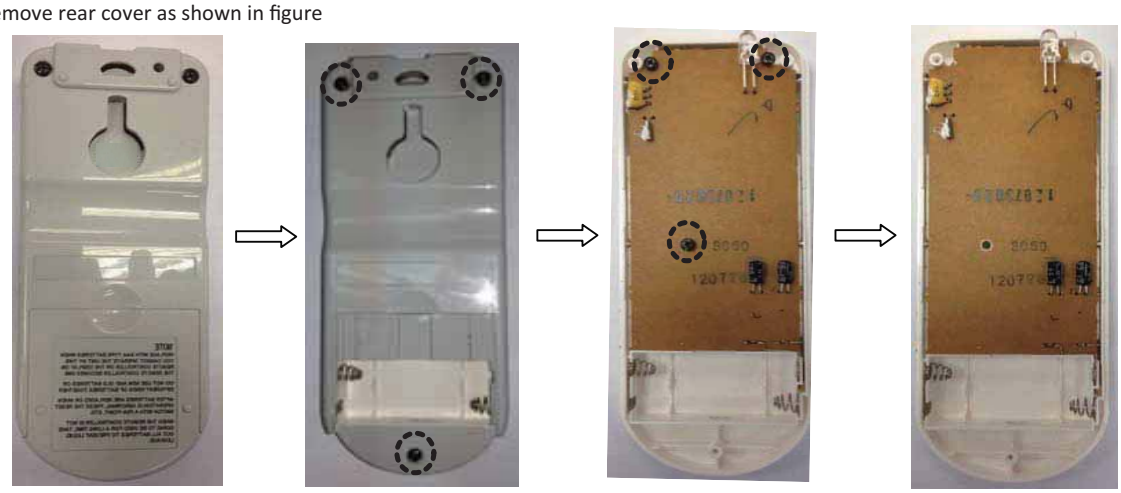

① Remove rear cover

②Remove screws (3PC)

③Remove screws (3PC)

2.Short the JSW1 or J1 ON PCB according to different supplier.
For distinguishing them, we attached different type label in the battery case as below.

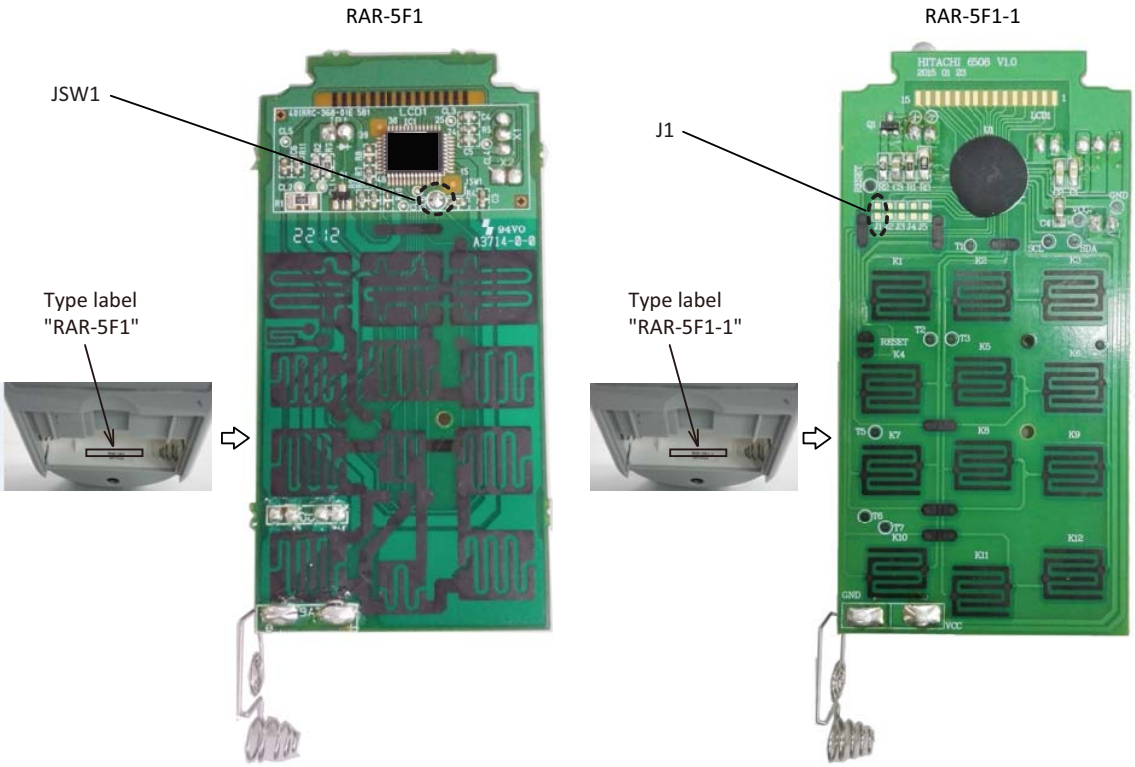

NOTE: Please set the DIP switch No.6 to ON accordingly (Refer to page 50).

HOW TO CHANGE THE SHIFT VALUE SETTING TEMPERATURE

The shift value setting temperature for Cooling and Heating mode operation can be change using remote controller. (This procedure shall be implemented strictly by service personnel only.)

PROCEDURES

1. Press and hold OFF (OFF) button and ON (ON) button.

2. Press [RESET] button on the same time. Release [RESET] button only, then release OFF (OFF) and ON (ON) button once Screen 1 appears.

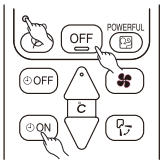

Screen 1

Screen 2

3. Press the button to display fan mode (Screen 3).

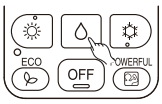

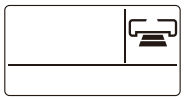

Screen 3

1. Press the Temperature button (or) to change the shift value.
(The shift value is changed with a beep.)

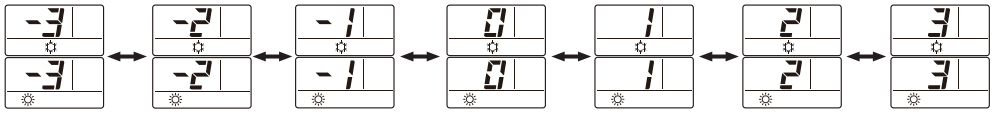

Decrease 3℃ from the initial shift value setting. | Decrease 2℃ from the initial shift value setting. | Decrease 1℃ from the initial shift value setting. | The initial shift value setting. | Increase 1℃ from the initial shift value setting. | Increase 2℃ from the initial shift value setting. | Increase 3℃ from the initial shift value setting.

2. Select (FAN SPEED) button to choose Heating Shift or Cooling Shift Mode (Screen 4).

By setting fan speed to HIGH or MED , it will go to Cooling Shift mode.
By setting fan speed to LOW or SILENT, it will go to Heating Shift mode.

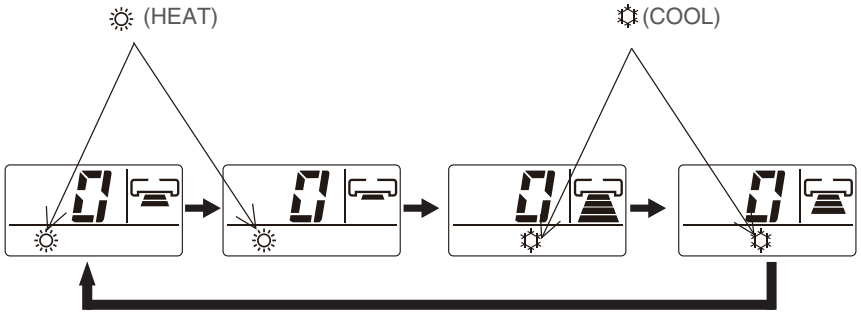

Screen 4

NOTE:

1. There are total of 7 shift values ranging from -3 to 3.
2. The displayed shift value, (HEAT) and (COOL) symbol on the remote controller display will be disappear after 10 seconds
3. The changed shift value will remain unchanged after turned off the power.
4. If “0” is displayed on the remote controller display, it indicates the shift value is now at the initial setting.

CHECKING THE REFRIGERATING CYCLE

(JUDGING BETWEEN GAS LEAKAGE AND COMPRESSOR DEFECTIVE)

1. Troubleshooting procedure (No operation, No heating, No cooling)

Connect U,V,W phase leads to the power module again and operate the air conditioner.

Is the self-diagnosis lamp mode as shown on the right?

Lighting mode / Self-diagnosis lamp	Blinks 2 times	Blinks 3 times	Blinks 4 times	Blinks 5 times	Blinks 6 times	Blinks 8times
LD301	▨	▨	▨	▨	▨	▨
Time until the lamp lights	Approx. 10 seconds			Approx. 10 seconds	Within Approx. 30 seconds	Approx. 10 seconds
Possible malfunctioning part	Compressor				Gas leakage	Compressor

▨ Blinking ☐ off

YES

Outdoor air temperature (℃)	Charge port pressure MPa(G) {kgf/cm²(G)}
50	2.96 {30.14}
45	2.62 {26.72}
40	2.31 {23.58}
35	2.03 {20.73}
30	1.78 {18.14}
25	1.55 {15.79}
20	1.34 {13.66}
15	1.15 {11.74}
10	0.98 {10.02}
5	0.83 { 8.48}
0	0.70 { 7.10}
−5	0.58 { 5.89}
−10	0.47 { 4.81}

(R410 A)
The values above are the theoretical ones.

Stop to operate and check the gas pressure in balancing mode.

Normal

• Checking the IPM (main P.W.B.)

When the self-diagnosis lamp lights in the same condition as above.

Error (Gas leaking)

Gas leaks.
Repair and seal refrigerant.

The compressor is defective. Replace it and seal refrigerant.
(If the compressor checker for an inverter type air conditioner is available, re-check using it.)

Perform a final check of operation.

How to run the product with the outdoor unit test switch

If the indoor electrical parts is out of order and if you wish to run the outdoor unit

1. Turn on the outdoor terminal boards L and N (220-230 V AC).
2. Confirm that the "LD301" blinks once from the terminal side of the outdoor unit. Afterwards (when about 30 sec elapses after the power turns on), confirm that the "LD301" changes to blinking 9 times (communication error).
3. When the "LD301" is blinks 9 times, if you press the test switch, the "LD301" lights up.

If you release your finger from the test switch within 1 sec to 5 sec after pressing the switch, the forced cooling operation starts.
※(If you press the test switch for 5 sec or longer, the self-check diagnosis starts. In this case, turn the power off and start the procedure from 1 again.)

※(For the initialization of the expansion valve, it may take 1 min until the operation starts.)

4. When you press the test switch again for 1 sec or longer, the unit stops the operation.

RAC-18/25/35WEC
RAC-10/14WECI

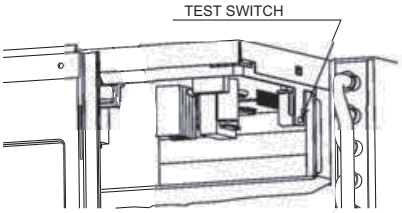

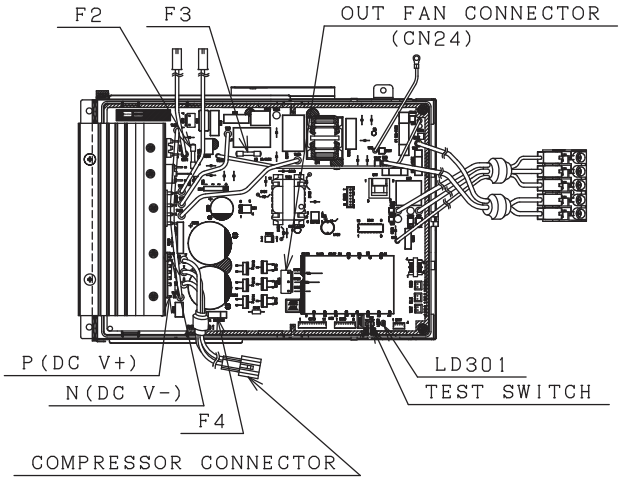

RAC-50WEC
RAC-20WECI

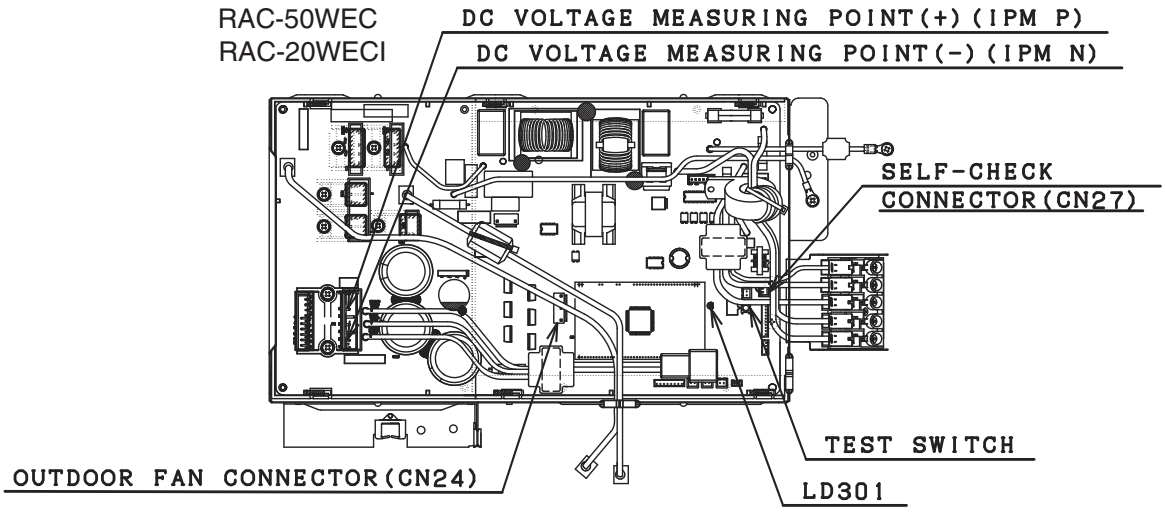

※Cautions

1. Applying power directly to the outdoor unit will cause a rush current to stress the outdoor unit. Therefore, if the indoor unit is not out of order, do not use the method descried in 2).
2. Before making the connections, be sure to turn off the breaker.
3. Do not under any circumstances run the product for more than 5 minutes.
4. Doing work with the compressor connector removed will cause the LD301 to blink 4 times. It will not start.
5. For another test run, turn off the breaker and turn it back on. (The test switch is accepted only once after power-on. After operation by remote control, it is not accepted.)
6. When the operation with the test switch is over, turn off the breaker and set the connectors back.

HOW TO OPERATE THE OUTDOOR UNIT INDEPENDENTLY

RAC-18/25/35WEC
RAC-10/14WECI

1. Connect the large dia. pipe side and small dia. pipe side service valve using a pipe.

Connect the small diameter service valve and the large diameter service valve using the reducing union and copper pipe as shown on the right.

Charge refrigerant of 300g after vacuuming (※1)

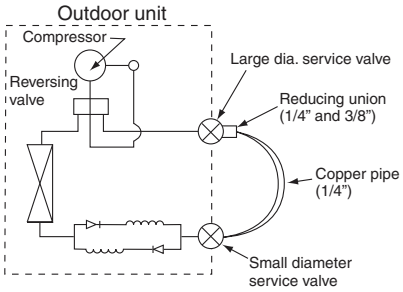

Parts to be prepared

(1) Reducing union
1/4" (6.35 mm)
3/8" (9.52 mm)
(2) Copper pipe (1/4" and 3/8")

Do not operate for more than 5 minutes

The operation method is the same as "How to operate using the connector to servicing the outdoor unit".
※1 The charging amount of 300g is equivalent to the load in normal operation.

RAC-50WEC
RAC-20WECI

1. Connect the large dia. pipe side and small dia. pipe side service valves using a pipe.

Connect the small diameter service value and the large diameter service valve using the reducing union and copper pipe as shown on the right.

Charge refrigerant of 300g after vacuuming (※1)

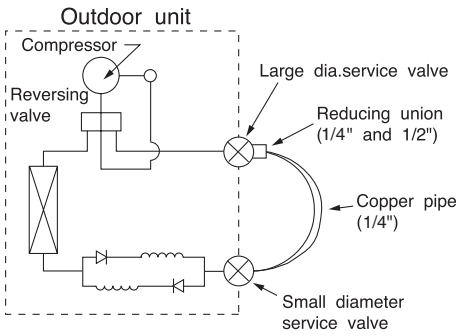

Parts to be prepared

(1) Reducing union
1/4" (6.35mm)
1/2" (12.7mm)
(2) Copper pipe (1/4" and 1/2")
(3) Shorting leads
2 leads approx. 10 cm long with alligator clip or IC clip

Do not operate for 5 minutes or more.

The operation method is the same as "How to operate using the connector to servicing the outdoor unit".
※1 The charging amount of 300g is equivalent to the load in normal operation.

PARTS LIST AND DIAGRAM

INDOOR UNIT

MODEL: RAK-18/25/35/50PEC
RAK-25/35/50PECC
RAK-10/14/20PECI

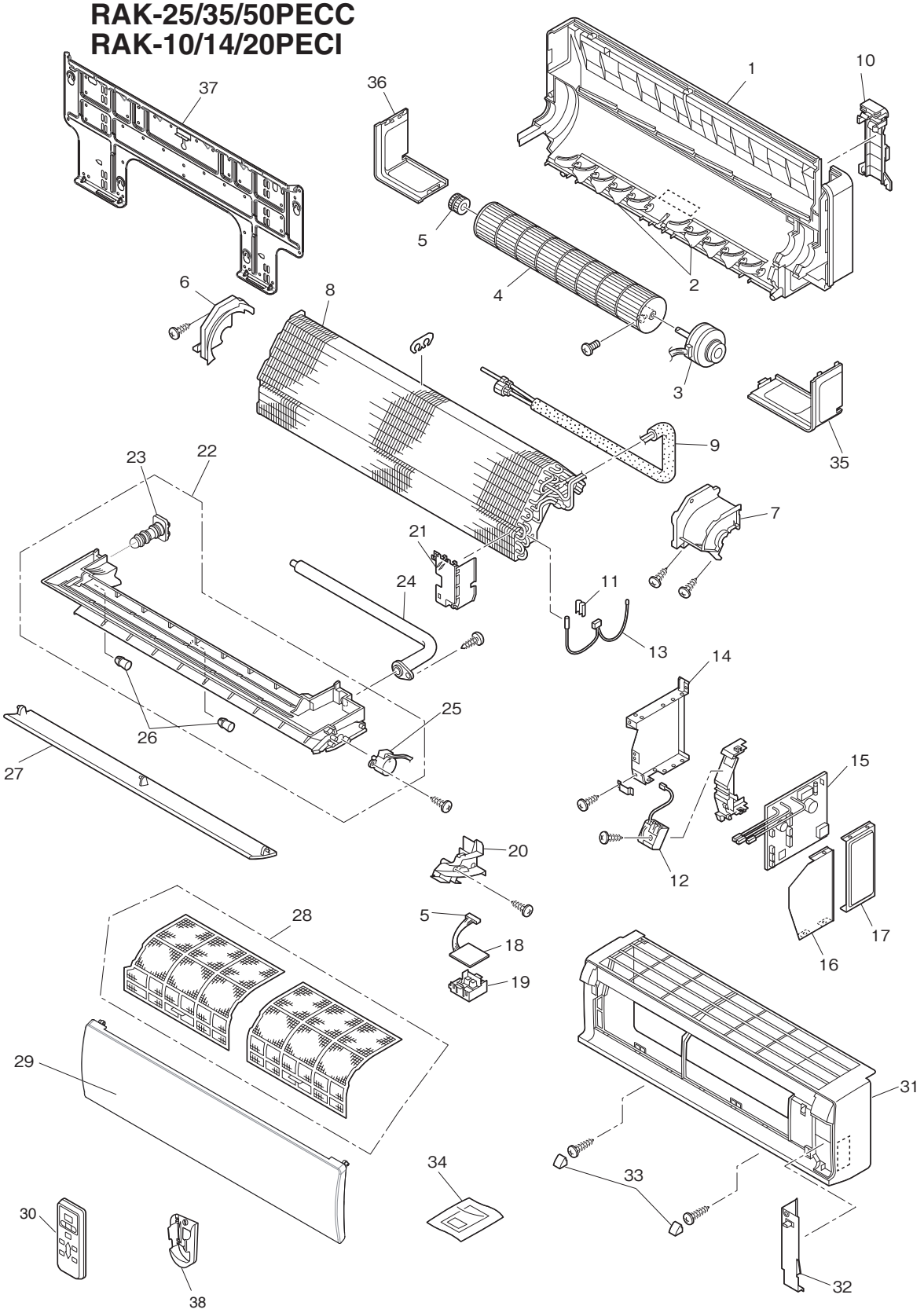

INDOOR UNIT

MODEL: RAK-18/25/35/50PEC

NO	HHAW PARTS NO				Q'TY/UNIT	PARTS NAME
	RAK-18PEC	RAK-25PEC	RAK-35PEC	RAK-50PEC		
1	HWRAK-18PEC 901				1	CABINET ASS'Y
2	HWRAS-K10HCG 902				2	VERTICAL AIR DEFLECTOR
3	HWRAS-K10HCG 903				1	FAN MOTOR
4	HWRAK-18PSPA 902				1	TANGENTIAL AIR FLOW FAN
5	HWRAS-25YH4 908				1	FAN SUPPORT ASS'Y
6	HWRAS-E10H3 905				1	FAN COVER
7	HWRAS-K10HCG 904				1	FAN MOTOR SUPPORT
8	HWRAS-K10HCG 905		HWRAS-K14HCG 901	HWRAK-50PEB 902	1	EVAPORATOR ASS'Y
9	HWRAS-K10HCG 906		HWRAS-E10H3 908	HWRAS-X18CBK A02	1	PIPING ASS'Y
10	HWRAS-E10H3 909				1	UPPER COVER
11	HWRAS-25YH4 A15				1	SPRING
12	HWRAS-K10HCG 908				1	TERMINAL BOARD (3P)
13	HWRAS-E10H3 911				1	THERMISTOR ASS'Y
14	HWRAK-35RPB 903				1	COVER (ELECTRIC)
15	HWRAK-18PEC 902	HWRAK-25PEC 901	HWRAK-35PEC 901	HWRAK-50PEC 901	1	P.W.B.(MAIN)
16	HWRAK-18PEB 907				1	ELEC-COVER-L
17	HWRAK-18PEB 908				1	ELEC-COVER-R
18	HWRAK-18PEB 909				1	P.W.B.(INDICATION)
19	HWRAS-E10H3 917				1	LED-COVER
20	HWRAS-K10HCG 910				1	FC-GUIDE
21	HWRAS-K10HCG 911		HWRAS-E10H3 919		1	PIPE COVER
22	HWRAS-K10HCG 912				1	DRAIN PAN ASS'Y
23	HWRAK-18PSPA 919				1	DRAIN CAP
24	HWRAS-E10H3 921				1	DRAINAGE PIPE
25	HWRAK-18PSPA 910				1	STEPPING MOTOR
26	HWRAS-25YH4 A28				2	DEFLECTOR SUPPORT
27	HWRAS-E10HA 901				1	HORIZONTAL AIR DEFLECTOR
28	HWRAS-E10H3 924				1	AIR FILTER
29	HWRAS-K10HCG 913				1	FRONT PANEL AS
30	HWRAS-K10HCG 919				1	REMOTE CONTROL ASS'Y
31	HWRAS-K10HCG 914				1	FRONT COVER
32	HWRAS-K10HCG 915				1	T-COVER ASS'Y
33	HWRAS-E10H3 928				2	CAP
34	HWRAS-K10HCG 916				1	H-LABEL
35	HWRAS-E10H3 930				1	S-COVER-R
36	HWRAS-E10H3 931				1	S-COVER-L
37	HWRAK-18PEC 903				1	MOUNTING PLATE
38	HWRAS-E10CXK 014				1	RE-HOLDER

INDOOR UNIT

MODEL: RAK-25/35/50PECC

NO	HHAW PARTS NO			Q'TY/UNIT	PARTS NAME
	RAK-25PECC	RAK-35PECC	RAK-50PECC		
1	HWRAK-18PEC 901			1	CABINET ASS'Y
2	HWRAS-K10HCG 902			2	VERTICAL AIR DEFLECTOR
3	HWRAS-K10HCG 903			1	FAN MOTOR
4	HWRAK-18PSPA 902			1	TANGENTIAL AIR FLOW FAN
5	HWRAS-25YH4 908			1	FAN SUPPORT ASS'Y
6	HWRAS-E10H3 905			1	FAN COVER
7	HWRAS-K10HCG 904			1	FAN MOTOR SUPPORT
8	HWRAS-K10HCG 905	HWRAS-K14HCG 901	HWRAK-50PEB 902	1	EVAPORATOR ASS'Y
9	HWRAS-K10HCG 906	HWRAS-E10H3 908	HWRAS-X18CBK A02	1	PIPING ASS'Y
10	HWRAS-E10H3 909			1	UPPER COVER
11	HWRAS-25YH4 A15			1	SPRING
12	HWRAS-K10HCG 908			1	TERMINAL BOARD (3P)
13	HWRAS-E10H3 911			1	THERMISTOR ASS'Y
14	HWRAK-35RPB 903			1	COVER (ELECTRIC)
15	HWRAK-25PECC 901	HWRAK-35PECC 901	HWRAK-50PECC 901	1	P.W.B.(MAIN)
16	HWRAK-18PEB 907			1	ELEC-COVER-L
17	HWRAK-18PEB 908			1	ELEC-COVER-R
18	HWRAK-18PEB 909			1	P.W.B.(INDICATION)
19	HWRAS-E10H3 917			1	LED-COVER
20	HWRAS-K10HCG 910			1	FC-GUIDE
21	HWRAS-K10HCG 911	HWRAS-E10H3 919		1	PIPE COVER
22	HWRAS-K10HCG 912			1	DRAIN PAN ASS'Y
23	HWRAK-18PSPA 919			1	DRAIN CAP
24	HWRAS-E10H3 921			1	DRAINAGE PIPE
25	HWRAK-18PSPA 910			1	STEPPING MOTOR
26	HWRAS-25YH4 A28			2	DEFLECTOR SUPPORT
27	HWRAS-E10HA 901			1	HORIZONTAL AIR DEFLECTOR
28	HWRAS-E10H3 924			1	AIR FILTER
29	HWRAS-K10HCG 913			1	FRONT PANEL AS
30	HWRAS-K10HCG 919			1	REMOTE CONTROL ASS'Y
31	HWRAS-K10HCG 914			1	FRONT COVER
32	HWRAS-K10HCG 915			1	T-COVER ASS'Y
33	HWRAS-E10H3 928			2	CAP
34	HWRAS-K10HCG 916			1	H-LABEL
35	HWRAS-E10H3 930			1	S-COVER-R
36	HWRAS-E10H3 931			1	S-COVER-L
37	HWRAK-18PEC 903			1	MOUNTING PLATE
38	HWRAS-E10CXK 014			1	RE-HOLDER

INDOOR UNIT

MODEL: RAK-10/14/20PECI

NO	HHAW PARTS NO			Q'TY/UNIT	PARTS NAME
	RAK-10PECI	RAK-14PECI	RAK-20PECI		
1	HWRAS-K10HCG 901			1	CABINET ASS'Y
2	HWRAS-K10HCG 902			2	VERTICAL AIR DEFLECTOR
3	HWRAS-K10HCG 903			1	FAN MOTOR
4	HWRAK-18PSPA 902			1	TANGENTIAL AIR FLOW FAN
5	HWRAS-25YH4 908			1	FAN SUPPORT ASS'Y
6	HWRAS-E10H3 905			1	FAN COVER
7	HWRAS-K10HCG 904			1	FAN MOTOR SUPPORT
8	HWRAS-K10HCG 905	HWRAS-K14HCG 901	HWRAK-50PEB 902	1	EVAPORATOR ASS'Y
9	HWRAS-K10HCG 906	HWRAS-E10H3 908	HWRAS-X18CBK A02	1	PIPING ASS'Y
10	HWRAS-K10HCG 907			1	UPPER COVER
11	HWRAS-25YH4 A15			1	SPRING
12	HWRAS-K10HCG 908			1	TERMINAL BOARD (3P)
13	HWRAS-E10H3 911			1	THERMISTOR ASS'Y
14	HWRAK-35RPB 903			1	COVER (ELECTRIC)
15	HRAK-10PECI 901	HRAK-14PECI 901	HRAK-20PECI 901	1	P.W.B.(MAIN)
16	HWRAK-18PEB 907			1	ELEC-COVER-L
17	HWRAK-18PEB 908			1	ELEC-COVER-R
18	HWRAK-18PEB 909			1	P.W.B.(INDICATION)
19	HWRAS-E10H3 917			1	LED-COVER
20	HWRAS-K10HCG 910			1	FC-GUIDE
21	HWRAS-K10HCG 911	HWRAS-E10H3 919		1	PIPE COVER
22	HWRAS-K10HCG 912			1	DRAIN PAN ASS'Y
23	HWRAK-18PSPA 919			1	DRAIN CAP
24	HWRAS-E10H3 921			1	DRAINAGE PIPE
25	HWRAK-18PSPA 910			1	STEPPING MOTOR
26	HWRAS-25YH4 A28			2	DEFLECTOR SUPPORT
27	HWRAS-E10HA 901			1	HORIZONTAL AIR DEFLECTOR
28	HWRAS-E10H3 924			1	AIR FILTER
29	HWRAS-K10HCG 913			1	FRONT PANEL AS
30	HWRAS-K10HCG 919			1	REMOTE CONTROL ASS'Y
31	HWRAS-K10HCG 914			1	FRONT COVER
32	HWRAS-K10HCG 915			1	T-COVER ASS'Y
33	HWRAS-E10H3 928			2	CAP
34	HWRAS-K10HCG 916			1	H-LABEL
35	HWRAS-K10HCG 917			1	S-COVER-R
36	HWRAS-K10HCG 918			1	S-COVER-L
37	HWRAK-18PEC 903			1	MOUNTING PLATE
38	HWRAS-E10CXK 014			1	RE-HOLDER

OUTDOOR UNIT

MODEL RAC-18/25/35WEC
RAC-10/14WECI

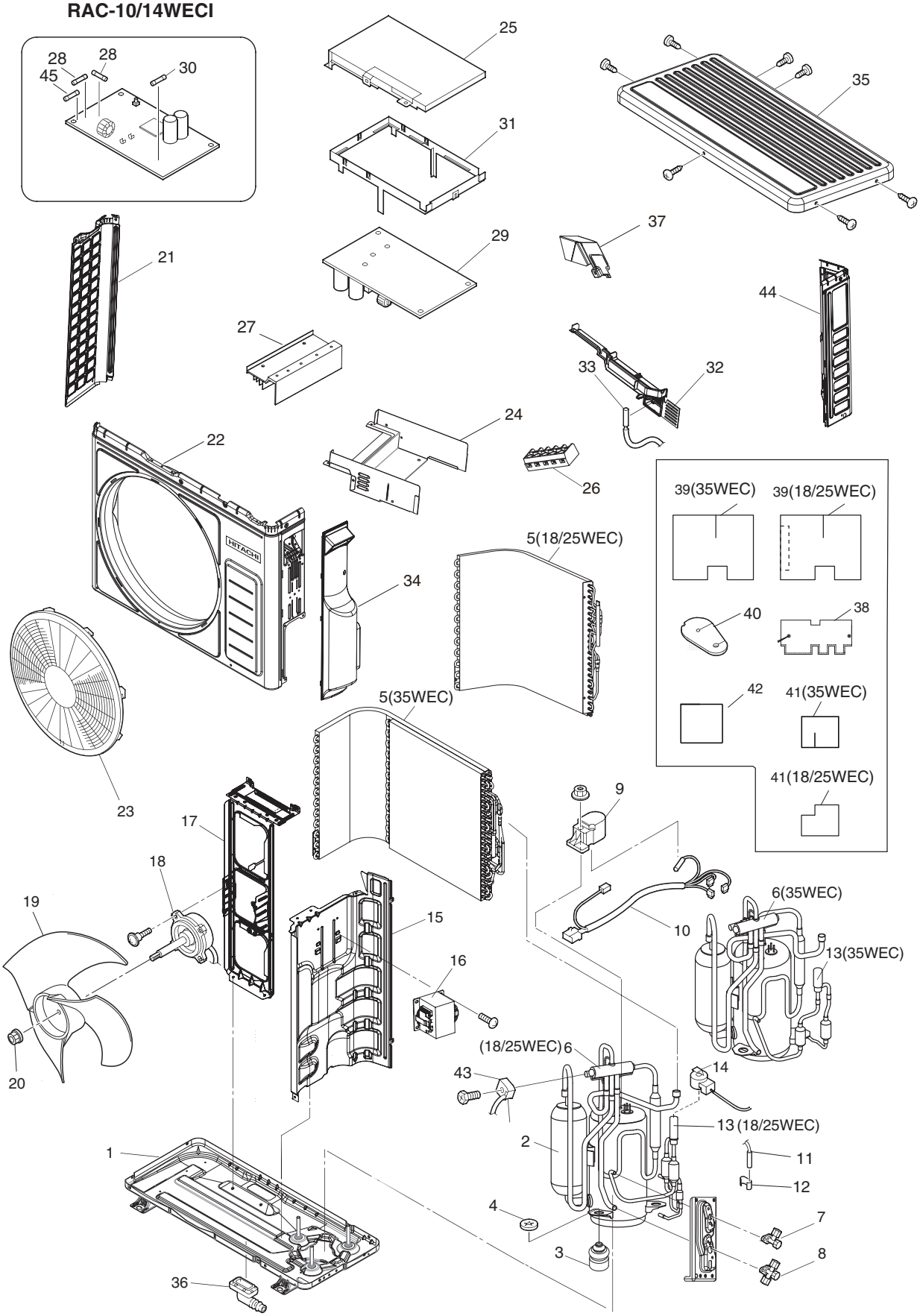

OUTDOOR UNIT

MODEL: RAC-18/25/35WEC
RAC-10/14WECI

NO	HHAW PARTS NO			Q'TY/ UNIT	PARTS NAME
	RAC-18WEC	RAC-25WEC RAC-10WECI	RAC-35WEC RAC-14WECI		
1	HWRAC-K10HCG A01			1	BASE
2	HWRAC-18WEB A02			1	COMPRESSOR
3	HWRAC-18WEB A03			3	COMPRESSOR RUBBER
4	HWRAC-18WEB A04			3	PUSH NUT
5	HWRAC-K10HCG A02		HWRAC-18WEB A05	1	CONDENSER
6	HWRAC-18WEC A01		HWRAC-35WEC A01	1	REVERSING VALVE
7	HWRAC-50WEA A06			1	2S-VALVE
8	HWRAC-10GH5 A03			1	3S-VALVE
9	HWRAC-18WEB A07			1	O.L.R COVER
10	HWRAC-18WSA A11			1	CONNECTING CORD(COMP)
11	HWRAC-E10H2 A09			1	THERMISTOR (DEFROST)
12	HWRAC-D10EX A08			1	THERMISTOR SUPPORT
13	HWRAC-18WEC A02		HWRAC-35WEC A02	1	ELECTRIC EXPAN. VALVE
14	HWRAC-K10HCG A05		HWRAC-E08H A09	1	COIL(EXPAN. VALVE)
15	HWRAC-18WEB A33			1	PARTITION
16	HWRAC-K10HCG A06			1	REACTOR
17	HWRAC-K10HCG A07		HWRAC-18WEB A11	1	FAN MOTOR SUPPORT
18	HWRAC-K10HCG A08			1	FAN MOTOR
19	HWRAC-K10HCG A09			1	PROPELLER FAN
20	HWRAC-25YH4 A24			1	NUT (PROPELLER.FAN)
21	HWRAC-K10HCG A10			1	SIDE COVER (L)
22	HWRAC-K10HCG A20			1	FRONT COVER
23	HWRAC-18WEB A16			1	DISCHARGE GRILL
24	HWRAC-K10HCG A11			1	ELECTRIC PARTS PLATE
25	HWRAC-18WEB A18			1	ELECTRIC PARTS COVER
26	HWRAC-K10HCG A12			1	TERMINAL BOARD (5P)
27	HWRAC-18WEB A20		HWRAC-35WEB A01	1	HEAT SINK(REGURATOR 1)
28	HWRAC-50NX2 A52			2	FUSE (3.15A)
29	HWRAC-18WEC A03	HWRAC-K10HCG A13	HWRAC-35WEC A03	1	P.W.B.(MAIN)
30	HWRAC-18WEB A22			1	FUSE (15A)
31	HWRAC-18WEB A23			1	SUPPORT (P.W.B.)
32	HWRAC-K10HCG A14			1	COVER(OUTDOOR THERMISTOR)
33	HWRAC-D10EX A17			1	THERMISTOR(OUTDOOR TEMP.)
34	HWRAC-K10HCG A15			1	EV-COV-ZU
35	HWRAC-18WEB A26			1	T-COVERZU
36	HWRAC-25YHA4 A50			1	DRAIN PIPE
37	HWRAC-18WEB A28			1	TERMINAL COVER
38	HWRAC-K10HCG A16			1	SOUND PROOF COVER ASS'Y
39	HWRAC-K10HCG A17		HWRAC-K14HCG A03	1	SOUND PROOF COVER ASS'Y
40	HWRAC-K10HCG A18			1	SOUND PROOF COVER ASS'Y
41	HWRAC-K10HCG A19		HWRAC-18WEB A31	1	SOUND PROOF COVER ASS'Y
42	HWRAC-18WEB A30			1	SOUND PROOF COVER ASS'Y
43	HWRAC-SX10HAK A20			1	COIL(REVERSING VALVE)
44	HWRAC-18WEB A32			1	SIDE COVER (R)
45	HWRAC-K10HCG A21			1	FUSE (15A)

OUTDOOR UNIT

MODEL RAC-50WEC
RAC-20WECI

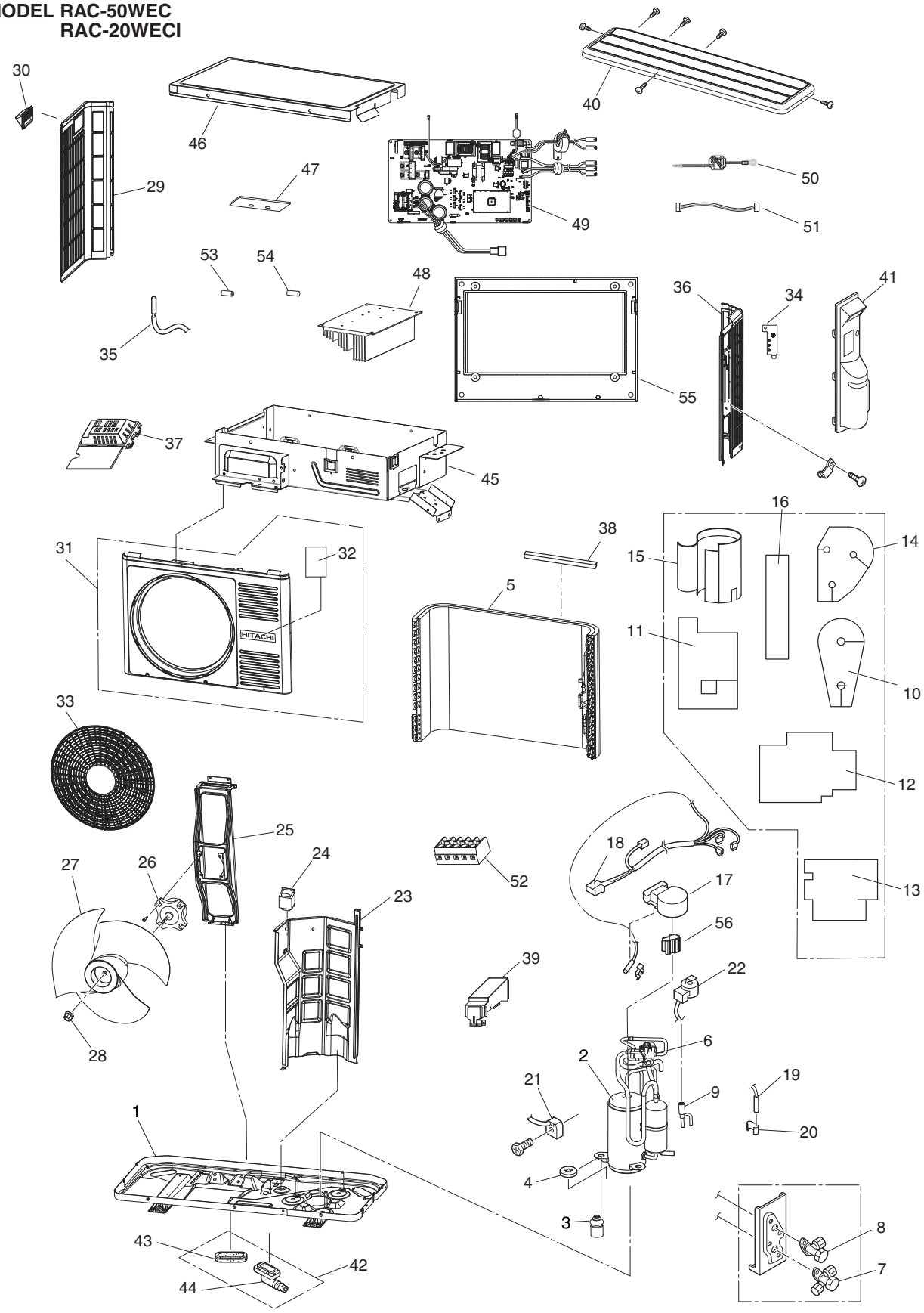

OUTDOOR UNIT

MODEL: RAC-50WEC
RAC-20WECI

NO	HHAW PARTS NO RAC-50WEC RAC-20WECI	Q'TY/UNIT	PARTS NAME
1	HWRAC-50WEA A01	1	BASE
2	HWRAC-50WEA A02	1	COMPRESSOR
3	HWRAC-50WEA A03	3	COMPRESSOR RUBBER
4	HWRAC-50NX2 A04	3	PUSH NUT
5	HWRAC-50WEC A01	1	CONDENSER
6	HWRAC-50WEC A02	1	REVERSING VALVE
7	HWRAC-50WEA A05	1	SERVICE VALVE
8	HWRAC-50WEA A06	1	SERVICE VALVE
9	HWRAC-50WEC A03	1	ELECTRIC EXPANSION VALVE
10	HWRAC-50WEB A19	1	SOUND PROOF
11	HWRAC-50WEC A04	1	SOUND PROOF
12	HWRAC-50WEC A05	1	SOUND PROOF
13	HWRAC-50WEC A06	1	SOUND PROOF
14	HWRAC-50WEC A07	1	SOUND PROOF
15	HWRAC-50WEC A08	1	SOUND PROOF
16	HWRAC-50WEC A09	1	SOUND PROOF
17	HWRAC-50WEA A11	1	O.L.R COVER
18	HWRAC-50WEA A12	1	CONNECTING CORD(COMP)
19	HWRAC-50NX2 A16	1	THERMISTOR (DEFROST)
20	HWRAC-50NX2 A17	1	THERMISTOR SUPPORT
21	HWRAC-SX10HAK A20	1	COIL(REVERSING VALVE)
22	HWRAC-50WEC A10	1	COIL(EXPANSION VALVE)
23	HWRAC-50WEC A11	1	PARTITION
24	HWRAC-18WSPA A06	1	REACTOR
25	HWRAC-50WEB A02	1	FAN MOTOR SUPPORT
26	HWRAC-K10HCG A08	1	FAN MOTOR
27	HWRAC-50WEC A12	1	PROPELLER FAN
28	HWRAC-50NX2 A25	1	NUT (PROPELLER FAN)
29	HWRAC-50NX2 A26	1	SIDE COVER (L)
30	HWRAC-50NX2 A27	1	HANDLE
31	HWRAC-50WEC A13	1	FRONT COVER
32	HWRAC-50WEB A20	1	BUTYL
33	HWRAC-50WEC A14	1	DISCHARGE GRILL
34	HWRAC-50WEA A14	1	EARTH-PLATE
35	HWRAC-E14H3 914	1	THERMISTOR(OUTDOOR TEMPERATURE)
36	HWRAC-50NX2 A31	1	SIDE COVER (R)
37	HWRAC-18WSPA A24	1	TC-COVER
38	HWRAC-50WEC A15	1	H-SHEET
39	HWRAC-50WEC A16	1	TERMINAL COVER
40	HWRAC-SX18HAK A28	1	TOP COVER
41	HWRAC-50NX2 A35	1	SERVICE VALVE COVER
42	HWRAC-50NX2 A36	1	BUSH ASSEMBLY
43	HWRAC-50NX2 A37	2	BUSH
44	HWRAC-50NX2 A38	1	DRAIN PIPE
45	HWRAC-50WEC A17	1	ELECTRIC PARTS PLATE
46	HWRAC-50WEB A06	1	ELECTRIC PARTS COVER
47	HWRAC-50WEB A07	1	SUPPORT (P.W.B.)
48	HWRAC-50WEB A08	1	HEAT SINK
49	HWRAC-50WEC A18	1	P.W.B.(MAIN)
50	HWRAC-50WEB A10	1	12 CORD ASSEMBLY
51	HWRAC-50WEB A11	1	CORD ASSEMBLY
52	HWRAC-K10HCG A12	1	TERMINAL BOARD (5P)
53	HWRAC-50NX2 A51	1	FUSE (25A)
54	HWRAC-50NX2 A52	2	FUSE (3.15A)
55	HWRAC-50WEB A13	1	SUPPORT (P.W.B.)
56	HWRAC-50WEB A14	1	O.L.R COVER

HITACHI

RAK-18PEC/RAC-18WEC
RAK-25PEC/RAC-25WEC
RAK-35PEC/RAC-35WEC
RAK-50PEC/RAC-50WEC
RAK-25PECC/RAC-25WEC
RAK-35PECC/RAC-35WEC
RAK-50PECC/RAC-50WEC
RAK-10PECI/RAC-10WECI
RAK-14PECI/RAC-14WECI
RAK-20PECI/RAC-20WECI

HHAW NO. 0093E